ROWLINSON
GARDEN PRODUCTS

SS345

BBQ GAZEBO - Assembly Instruction

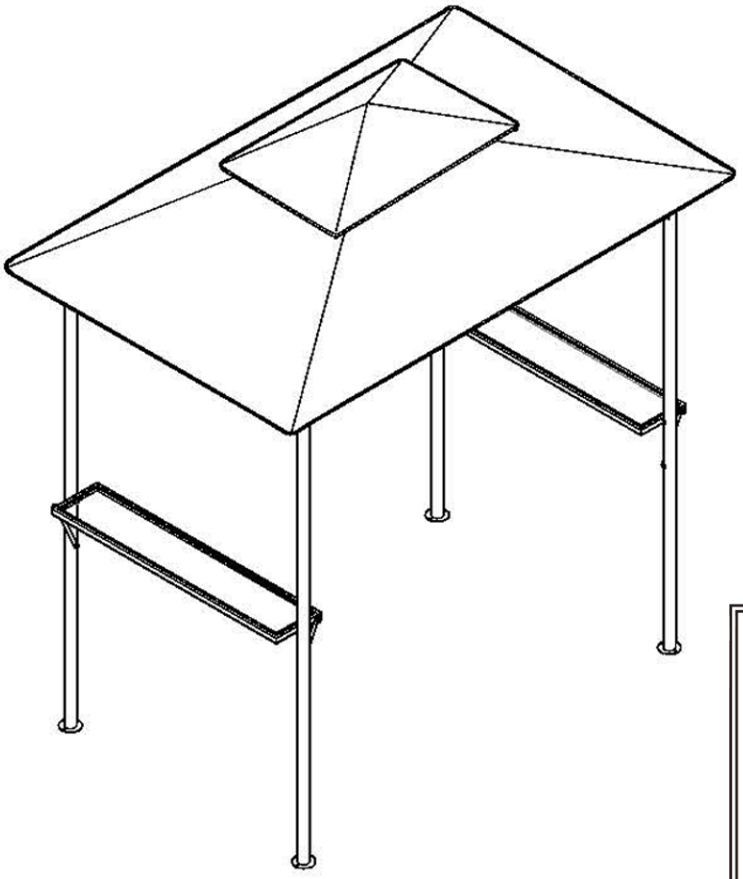

Caution

It is recommended that the two canopy covers are to be removed if high winds are forecast.

It is also recommended that canopy covers are taken down for winter storage, or if not in use for long periods of time.

- Tools required: Free-standing ladder (not included), Wrench (included)
- Do not throw away any packaging material until assembly is complete.
- Assemble product on a soft surface so as not to scratch or damage the frame.
- For ease of assembly, 2 people are recommended.
- Keep all small parts away from children.

Warning: *It is very important to read and follow these Safety Precautions before assembly and during the use of the product.*

1) Keep all flame and heat sources away from this tent fabric. This tent is made with fabric that meets CPAI-84 specification for flame resistance. It is not fireproof. The fabric will burn if left in continuous contact with any flame source. The application of any foreign substance to the tent fabric may render the flame-resistance properties ineffective.

2) When assembling and using this product, basic safety precautions must always be followed to reduce the risk of personal injury and damage to product or surroundings.

3) This Grill Gazebo is NOT a permanent structure and is designed for sunshade, and must be used under normal weather conditions. We recommend removal of the fabric canopy in windy conditions. You MUST completely disassemble the unit prior to any severe weather conditions such as thunderstorm, hurricane, and/or heavy wind and rain. Failure to remove the fabric canopy or disassemble the unit will damage the gazebo or even cause structural collapse.

4) Always install on level ground utilizing ground stakes. This Grill Gazebo should not be permanently staked or attached to concrete floor or platform.

5) Grill Gazebo fabrics are water resistant but not waterproof and may leak during precipitation. Fabrics will fade under direct exposure to sunlight. Keep all flame and heat sources away from canopy.

6) Keep all children and pets away from assembly area.

7) Begin assembly not less than 6 feet from any obstruction such as fence, garage, house, overhanging branches, clothes line or electrical wires.

8) Recommend to wear gloves as some parts may have sharp edges. At least two or more people are recommended for safe assembly.

9) Please properly tighten all hardware and perform periodic inspections during usage for cracked welds or loose nuts or bolts.

10) The grill should be placed just outside of the unit.

Part List For Style

Ref#	Illustration	Description	Qty
1	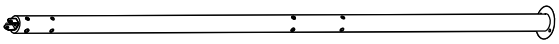	Corner Post	4 pcs
2	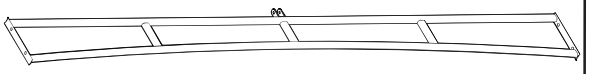	Long Beam	2 pcs
3		Short Beam	2 pcs
4	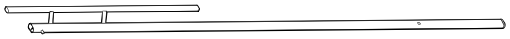	Corner Rib	4 pcs
5		Middle Rib	2 pcs
6	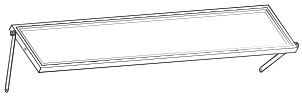	Bar Counter	2 pcs
7		Vent Hub	1 pc
8	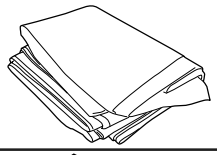	Main Canopy	1 pc
9	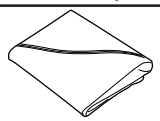	Vent Cover	1 pc
10	M6x25	Bolt	4 pcs
11	M6x15	Bolt	20 pcs
12	M6x25	Bolt and Nut	6 sets
13		Ground stake	4 pcs
14		Wrench	2 pcs

STEP 1: SETTING UP THE MAIN FRAME

Attach one post (1) to each side of each long beam (2) with two bolts (11).
Attach one short beam (3) to each two adjacent posts (1) with four bolts (11).
Please see below diagram for correct assembly.

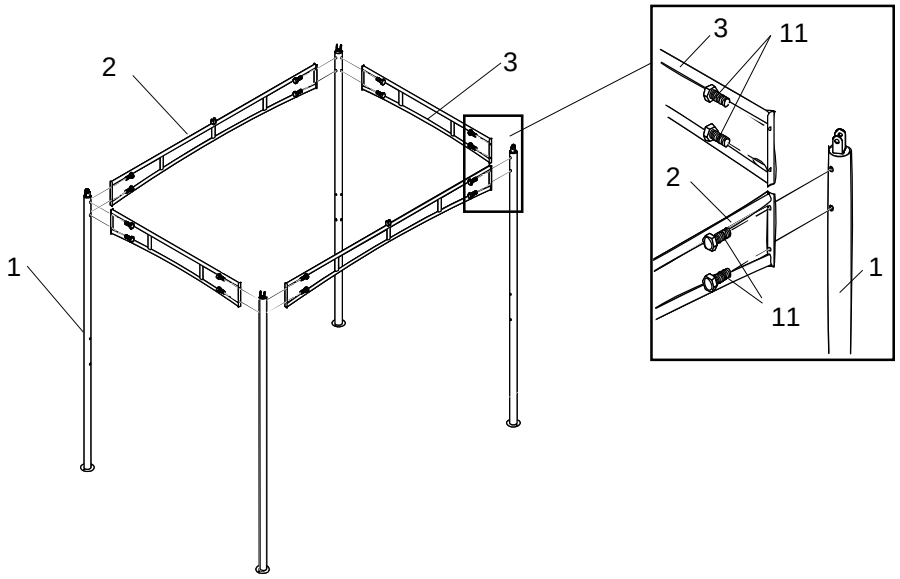

STEP 2: ATTACHING THE BAR COUNTERS

On each 5 foot side of the frame at the middle of two adjacent corner posts (1) attach one bar counter (6) with two bolts (10) and two bolts (11) using wrench (14).
Repeat this for the other bar counter (6).

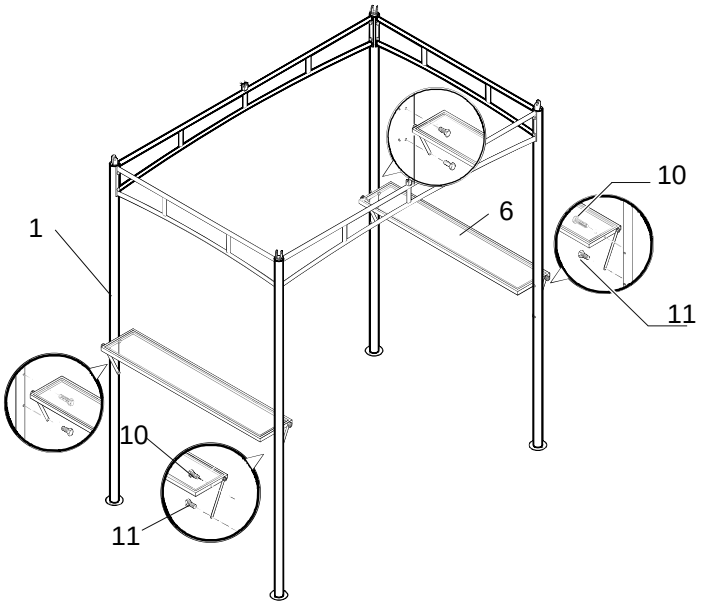

STEP 3: ASSEMBLING THE ROOF FRAME

Snap corner ribs (4) into the receivers 4 of the vent hub (7).

Snap middle ribs (5) into the receivers 5 of the vent hub (7).

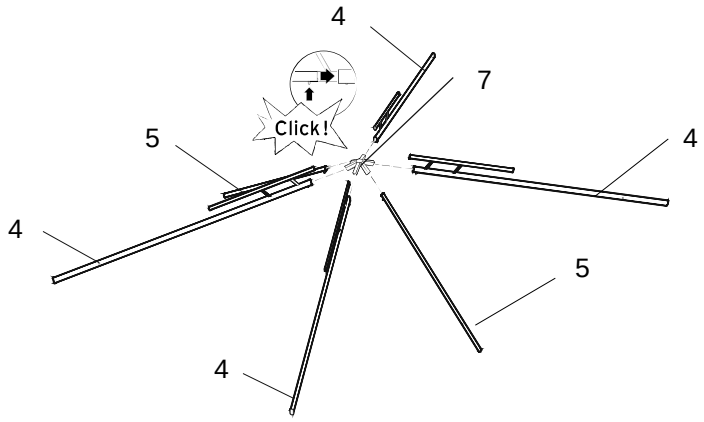

STEP 4: ATTACHING THE ROOF FRAME

With a ladder place the roof frame on the main frame.

Secure corner ribs (4) to the brackets at the top of corner posts (1) with bolts and nuts (12) using wrenches (14).

Secure middle ribs (5) to the brackets at the center of long beams (2) with bolts and nuts (12) using wrenches (14).

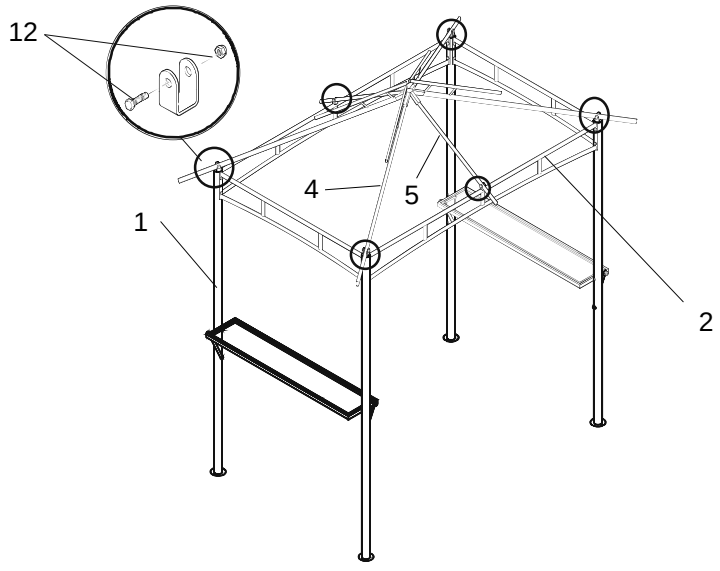

STEP 5. ATTACHING MAIN CANOPY

Gently place canopy (8) over the main roof.
Pull the main canopy (8) down over each corner until all rib pockets fit well to the roof,

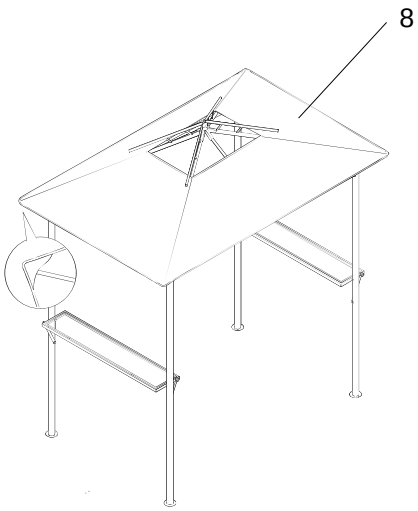

STEP 6. ATTACHING VENT COVER

Gently place vent cover (9) over the main roof.
Pull the vent cover (9) down over each corner until all rib pockets fit well to the vent roof.

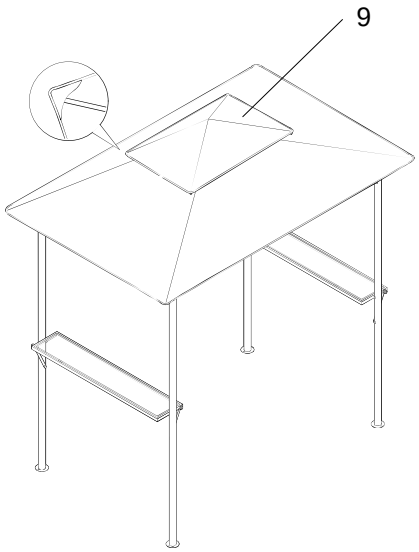

STEP 7： STABILIZING THE GAZEBO

Carefully adjust the position of the grill gazebo and make sure all corner posts are standing completely upright on level ground. Hammer one ground stake (13) through the hole on each post base into the ground.

Repeat the above process at each corner until the grill gazebo is firmly anchored.
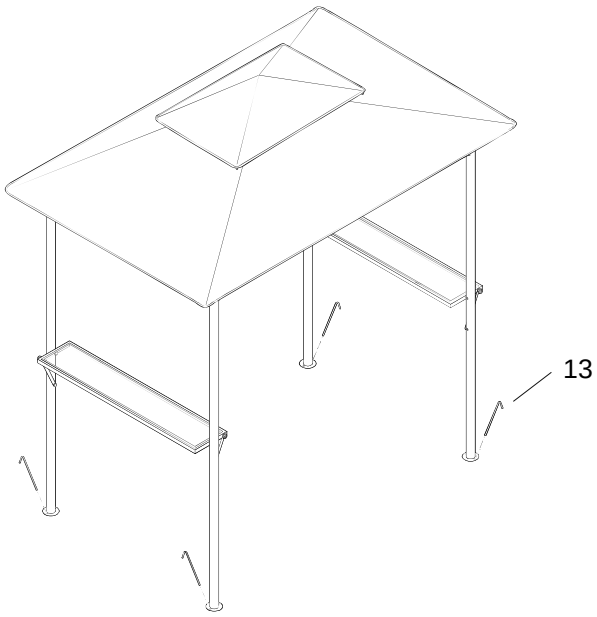
Again your grill gazebo is a shade structure and not meant to be permanent. Please read warning page again for safety precaution.