Forest Garden plc.
Unit 288 Hartlebury Trading Estate
Hartlebury
Worcestershire
Dy10 4JB

General Enquiries: 0844 248 9853
E-mail: info@forestgarden.co.uk

www.forestgarden.co.uk

ULTIMA PERGOLA UPK01

UPK01FP

ISSUE 0214

RETAIN FOR FUTURE REFERENCE: READ CAREFULLY.

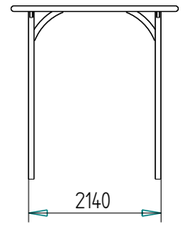

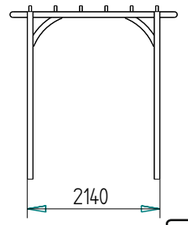

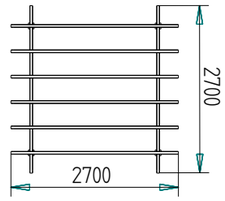

Important : Assembly of this Pergola requires two people.

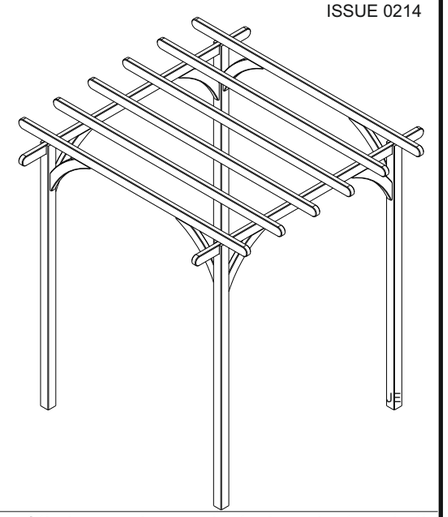

<u>Thank you for choosing this Pergola manufactured by the UK's largest manufacturer of timber garden products. In order to gain the most benefit from it, please note the following:</u>

- Exercise particular care and follow instructions.

- This Pergola is pressure treated to ensure the longevity of all timber components and protect against rot. This may leave a colour difference on some parts that will even out as the moisture content stabilises. For extra protection from the elements we recommend that you treat your structure using a wood preservative treatment. Apply in accordance with the manufacturers instructions.

- In line with your statutory rights, please check all parts prior to assembly, as assembly of damaged parts may be deemed to be acceptance and this may affect the remedies you are entitled to. If the product is not constructed in accordance with the instructions, or is altered in anyway (eg painted), the manufacturer cannot be held liable for any resulting damage.

- This product will shrink and swell as a result of varying moisture content.

- Please keep all plastic bags and small parts away from children in order to reduce the risk of suffocation.

<u>- Important Note : Do not lean or stand on rafters during assembly they are not load bearing.</u>

- If there are any technical queries with the product, please contact our customer help line on 0333 7777 089 between the hours of 8.30 am and 5.00 pm Monday to Friday.

POST **USU94BI** **4**

RAFTER **URCB9BI** **8**

BRACE **UCBCBI** **8**

UPK01FP (Fixing pack)

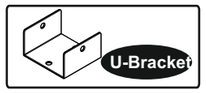

12

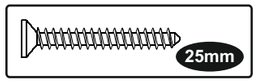

48

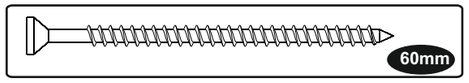

24

<u>REQUIRED TOOLS</u> : (NOT SUPPLIED)

DRILL

POZI DRIVE SCREWDRIVER

SPIRIT LEVEL

TAPE MEASURE

HAMMER

1

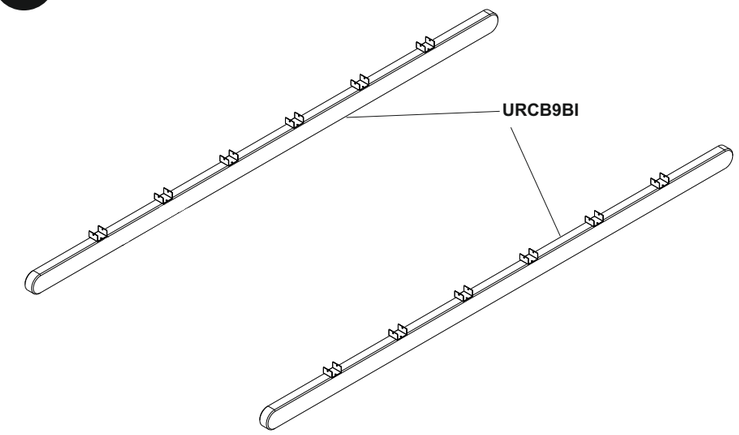

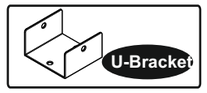

12

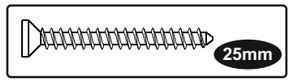

24

Space out the u-brackets evenly along the **URCB9BI** (rafters) at 362mm. Secure in place using 2x25mm screws

2

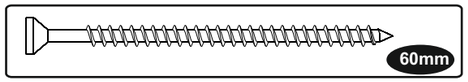

8

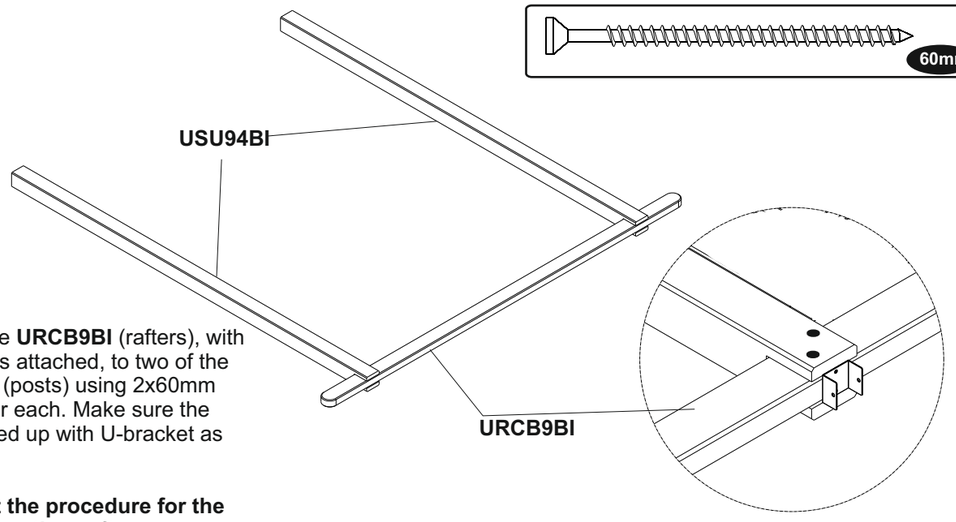

Secure the **URCB9BI** (rafters), with U-brackets attached, to two of the **USU94BI** (posts) using 2x60mm Screws for each. Make sure the post is lined up with U-bracket as shown

Repeat the procedure for the other rafter

3

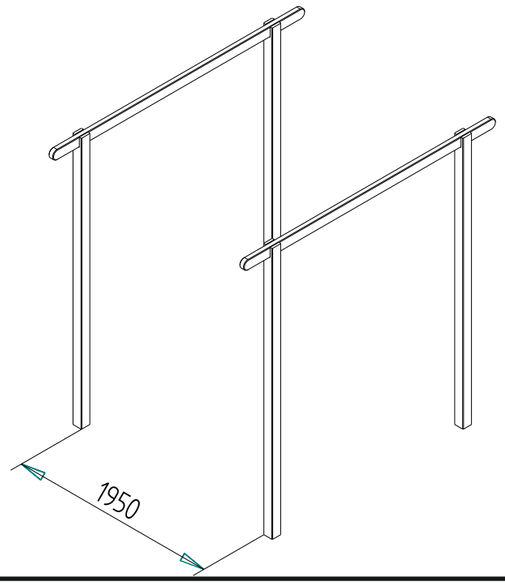

4

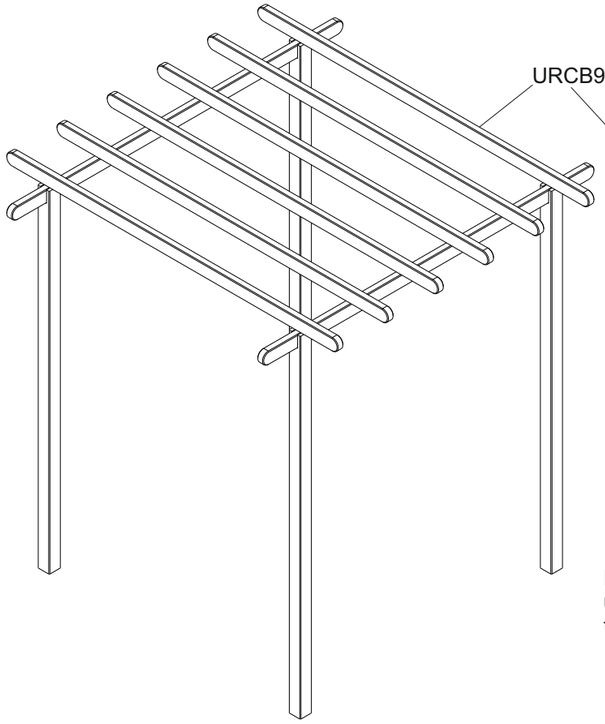

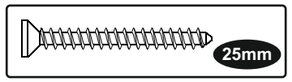

24

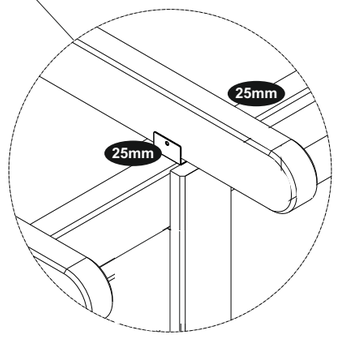

Fix the **URCB9BI** (rafters) in place using 25mm screws to fix the rafter to the brackets

5

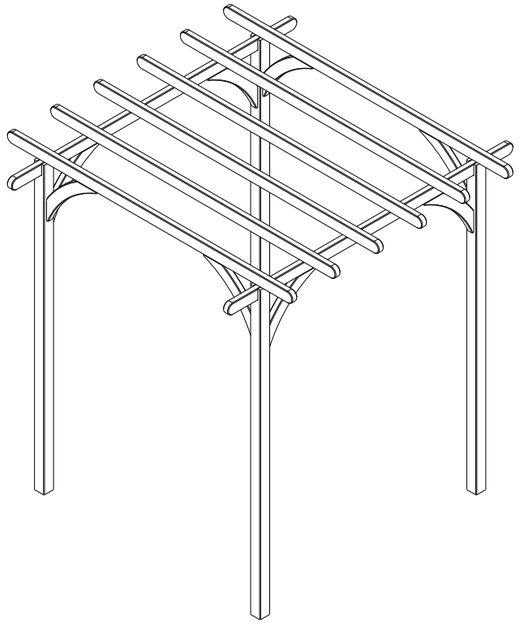

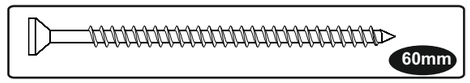

16
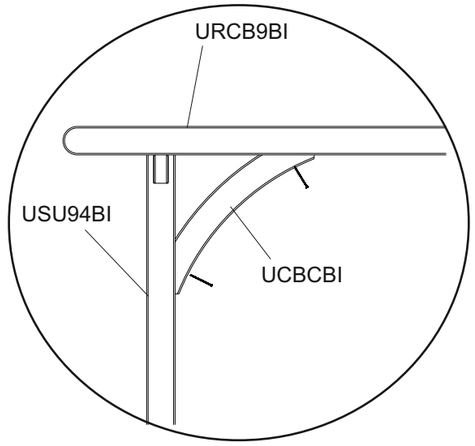
Secure the **UCBCBI** (braces) in place to the **USU94BI (**post**)** and the **URCB9BI** (rafter) through the pre-drilled holes using 2x60mm screws for each brace