Grange
DEFINING GARDENS

ELITE PORTICO ARCH

ELITEPORTE - 220cm [H] x 210cm [W] x 112.6cm [D]

Self-Assembly required | Home Delivery available | Pre-Painted available

PLAN

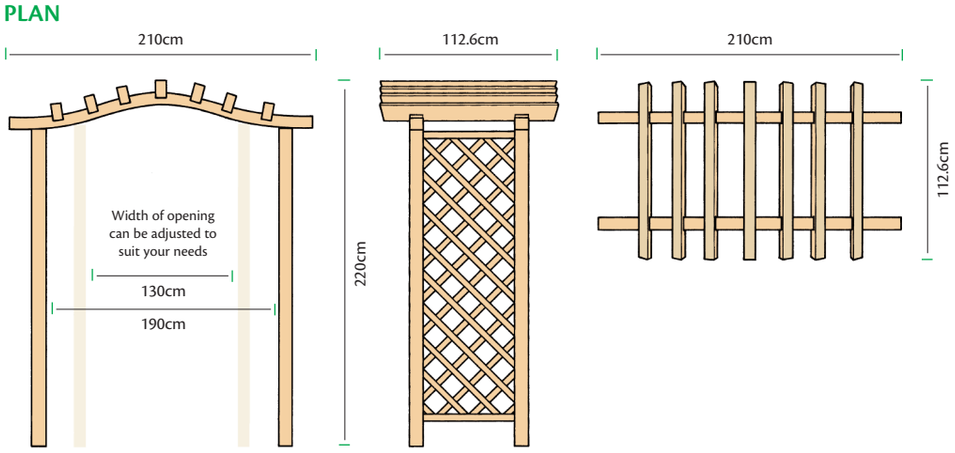

5 019063 601401 >

CODE ELITEPORTE

©2015 Grange Fencing Ltd
All rights reserved.

In line with the Company's policy of continuous product development, the right is reserved to change and improve product design without prior notice.

All products and related emblems featured are trademarks of Grange Fencing Ltd.

www.grangefen.co.uk

FSC
www.fsc.org
MIX
Wood from responsible sources
FSC® C018354

Elite Portico Arch [A4 label-assembly] 2/2/16 14:06 Page 2

ASSEMBLY INSTRUCTIONS

ELITE PORTICO ARCH

PRESSURE TREATED GREEN

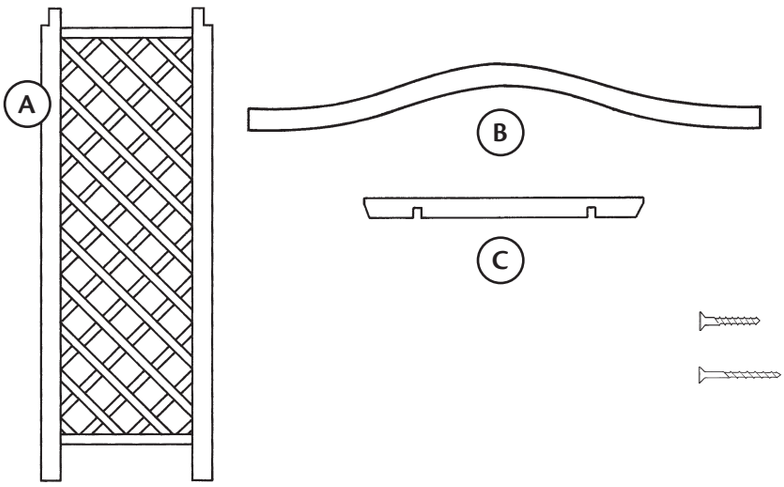

PARTS LIST

A	Side Panels	x 2
B	Curved Beams	x 2
C	Roof Rafters	x 7

HARDWARE PACK

[x]	4 x 50	x14
[y]	4 x 60	x 8

BEFORE YOU START

- Check the pack/s and make sure that you have all of the parts listed above. If not, contact your retailer who will be able to help you.
- When you are ready to start, make sure you have the right tools to hand, plenty of space and a clean, dry area for assembly.

  It is advisable for two people to carry out the work

SITE PREPARATION

Excavate a 30cm square hole (approx) for each post to a depth of at least 30cm. (see **Fig.A** right)

This will give your structure adequate stability.

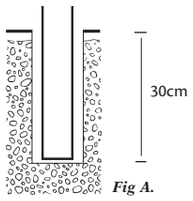

Fig A.

ASSEMBLY

1. Begin with the roof assembly.
2. Mark off seven points along the length of each of the curved beams where the rafters will be fitted (see ***Fig.1***). It is recommended that the centre is marked first and the other points measured from it.

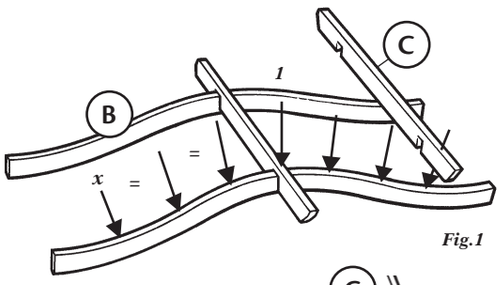

Fig.1

3. Fix the rafters to the curved beams using screws (***x***) from the topside of the rafters into the curved beam.
4. Lower one of the side sections into the prepared holes. Fix the roof assembly to the side section using screws (***y***) through the post into the roof assembly. Use two screws at each point (see ***Fig.2***).

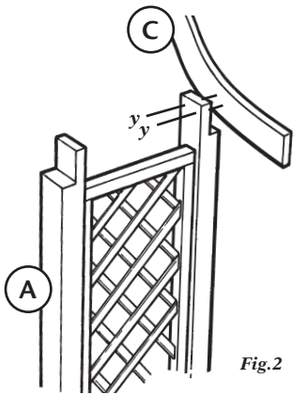

Fig.2

5. Repeat for the 2nd side section.
6. Ensure the arch is equally spaced, level and vertical (see ***Fig 3.***)
7. Fill in the holes using concrete or other preferred filling. Ensure the arch hasn't moved during infill.

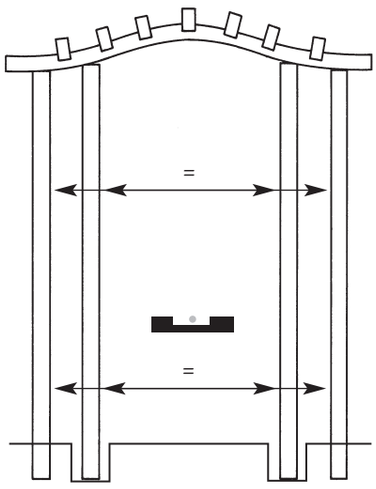

Fig.3

AFTERCARE

To ensure longevity of your structure it is recommended that it is treated with a wood preservative on a yearly basis.

Tools Required: Posidrive Screwdriver / Electric Drill