ROWLINSON GARDEN PRODUCTS LIMITED
Green Lane
Wardle, Nr. Nantwich
Cheshire. CW5 6BN
Help Line (Normal Office Hours): 01829 261 121
Email: support@rowgar.co.uk
Website: www.rowlinsongarden.co.uk

Brighton Companion Seat

Assembly Instruction

SS758

PLEASE READ COMPLETELY BEFORE YOU BEGIN ASSEMBLY

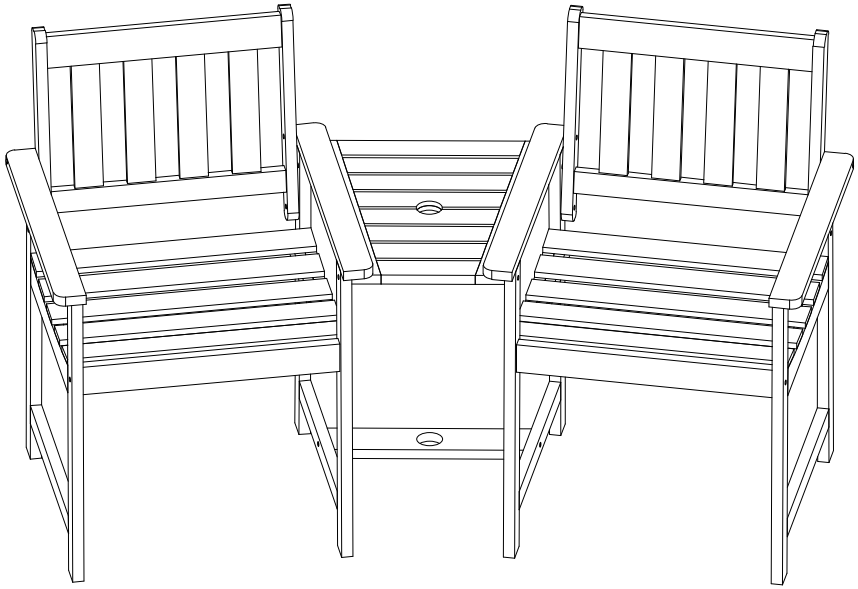

Assembled

HARDWARE LIST



① **Screw 7x70 = 6pcs**



② **Screw 6x50 = 4pcs**



③ **Bolt 6x70 = 4pcs**



④ **Bolt 6x35 = 4pcs**



⑤ **Sleeve nut 6x15 = 8pcs**



⑥ **Screw 4x35 = 8pcs**



⑦ **Plastic plugs = 26pcs**



⑧ **Allen key 4mm = 2pcs**

PARTS LIST

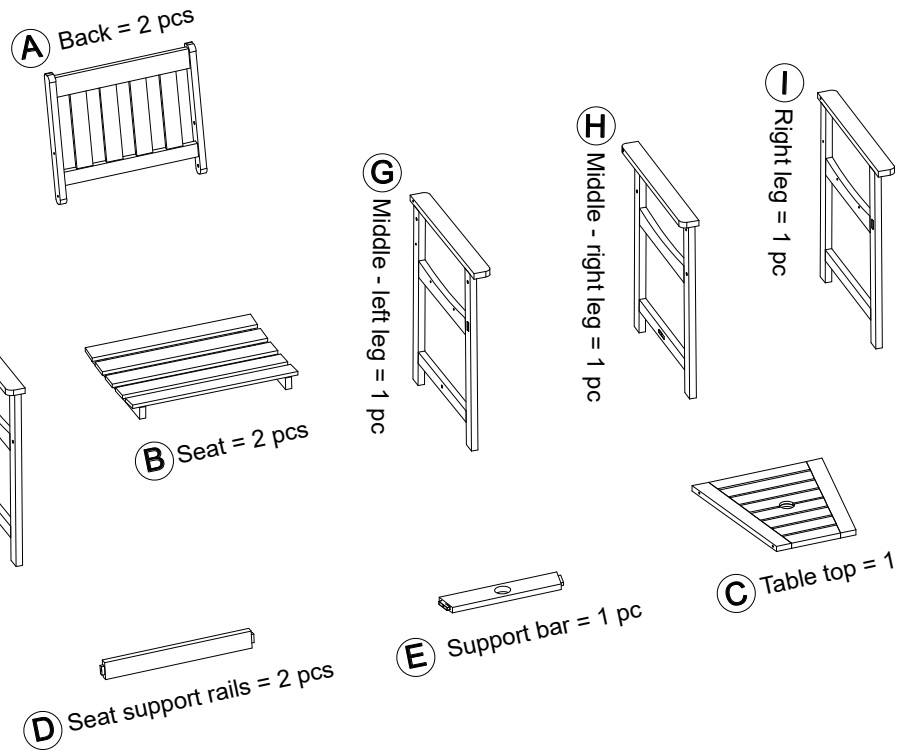

ROWLINSON GARDEN PRODUCTS LIMITED
Green Lane
Wardle, Nr. Nantwich
Cheshire. CW5 6BN
Help Line (Normal Office Hours): 01829 261 121
Email: support@rowgar.co.uk
Website: www.rowlinsongarden.co.uk

Brighton Companion Seat

Assembly Instruction

SS758

PLEASE READ COMPLETELY BEFORE YOU BEGIN ASSEMBLY

STEP 1

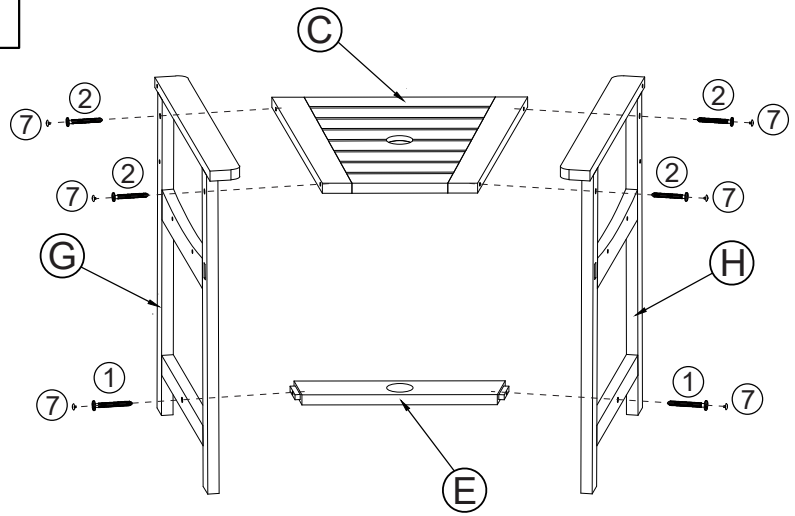

STEP 3

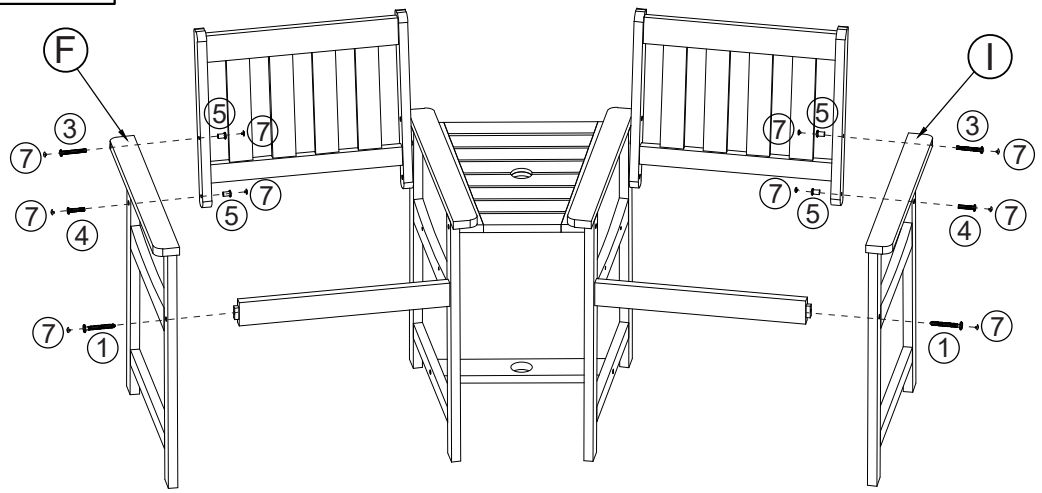

STEP 2

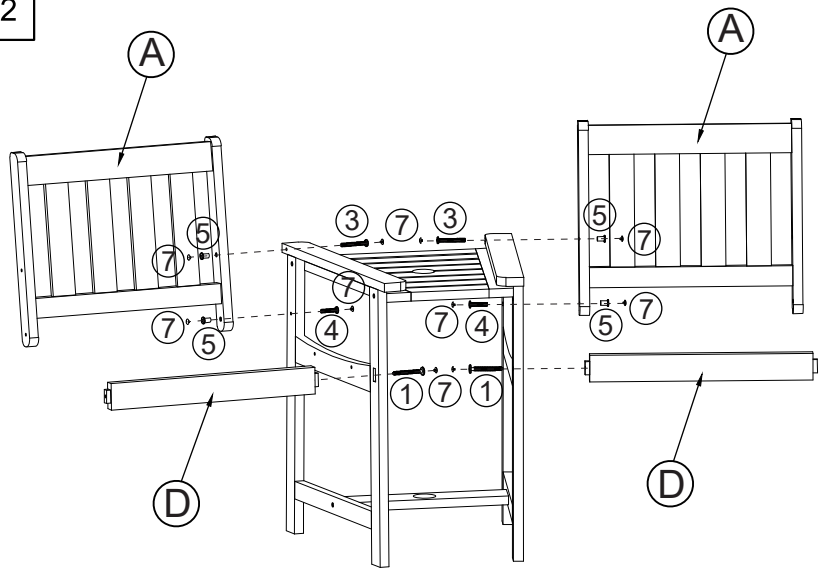

STEP 4

