ROWLINSON GARDEN PRODUCTS LIMITED
Green Lane
Wardle, Nr. Nantwich
Cheshire. CW5 6BN
Help Line (Normal Office Hours): 01829 261 121
Email: support@rowgar.co.uk Website: www.rowlinsongarden.co.uk

Heritage Bench

English SS775

Assembly Instructions

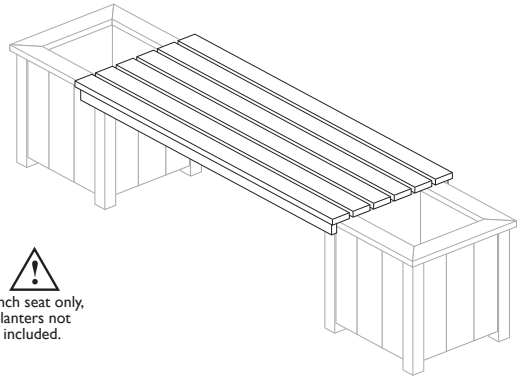

Biocidal Products Regulation EU 528/2012
Wolmanit® CX treated wood, is a treated article incorporating biocidal products: copper hydroxide carbonate, bis(N-cyclohexyl-diazenium-dioxy)-copper and Boric Acid. They protect wood against fungal decay, rot and insect attack. Wear gloves when handling freshly treated wood. Avoid breathing dust when cutting wood. Dispose of off-cuts responsibly.

Before assembly

- We recommend that time is taken to read the instructions before starting assembly, then follow the easy step by step guide. The instruction sheet is only a guide to the assembly. Certain items may not be shown to scale.
- Check all components prior to assembly
- Drill all components where indicated.
- This product should be assembled by two people
- Never attempt to erect the assembly in high winds.
- Please dispose of all packaging responsibly and recycle where possible in line with local authority requirements.

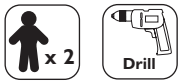

Recommended tools for assembly

- Power drill/screwdriver
- 2mm diameter drill bit
- Cross head screwdriver bit

No.	Components	Qty.
1	Bench Seat	1

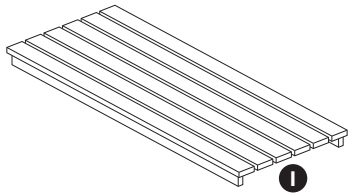

No.	Fixing Kit	Qty.
2	60mm Screws	4

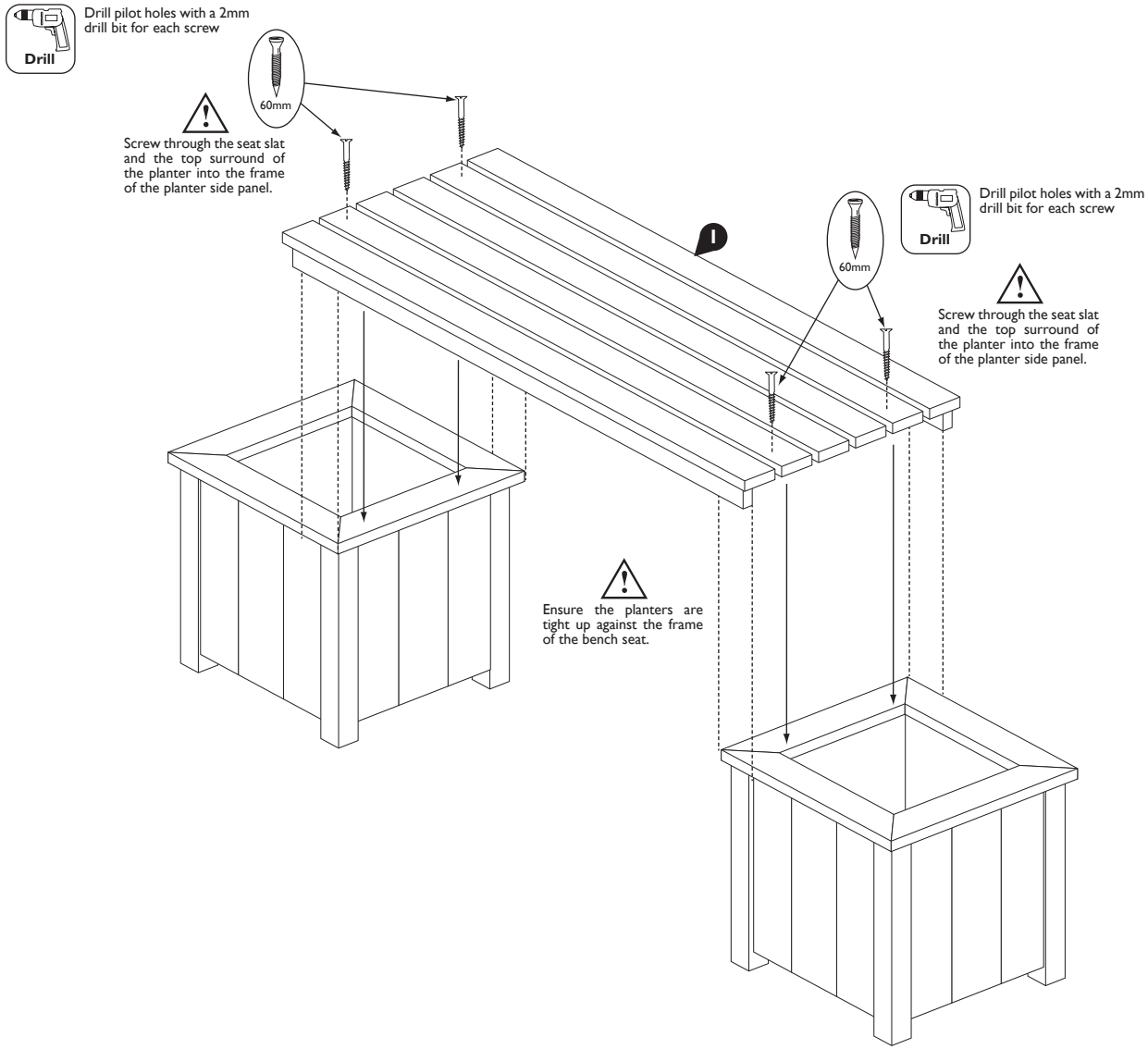

We constantly improve the quality of our products, occasionally the components may differ from the components shown and are only correct at time of printing. We reserve the right to change the specification of our products without prior notice.

2026 © Rowlinson Garden Products Ltd