IMPORTANT, RETAIN FOR FUTURE REFERENCE: READ CAREFULLY.

Check all parts are present prior to assembly.

- Always pre-drill timber to avoid splitting.
- The timber in this product is pressure treated to ensure longevity and protection against rot.
  This may leave colour variations, but these will even out as the moisture content stabilises.
- Timber is a natural material and will shrink and swell as a result of varying moisture content.
- Keep all plastic bags and parts away from children.
- This must be built on a solid level base.
- Assembly requires a minimum of two adults

Technical Help line: 0333 7777 089 8:30am - 5.00pm Monday to Friday

In line with your statutory rights, please check all parts prior to assembly, as assembly of damaged parts may be deemed to be acceptance and this may affect the remedies you are entitled to. If the product is not constructed in accordance with the instructions, or is altered in anyway (e.g. painted), the manufacturer cannot be held liable for any resulting damage.

This article contains biocidal products to give protection against wood destroying insects & wood rotting fungi. Contents may vary.
May contain : Basic copper carbonate (Copper (II) carbonate – Copper (II) hydroxide (1:1), Cupric oxide, Copper hydroxide carbonate, oxyethyl, ammoniumpropionate, Copper HDO, Propiconazole, Tebuconazole, Boric acid, Benzalkonium chloride.
Wear gloves when handling freshly treated wood. Avoid breathing dust when cutting treated or untreated wood. Dispose of off-cuts responsibly – do not burn.

REQUIRED TOOLS :
(NOT SUPPLIED)

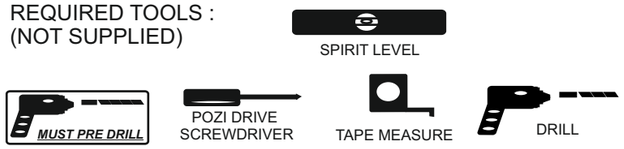

PARTS:

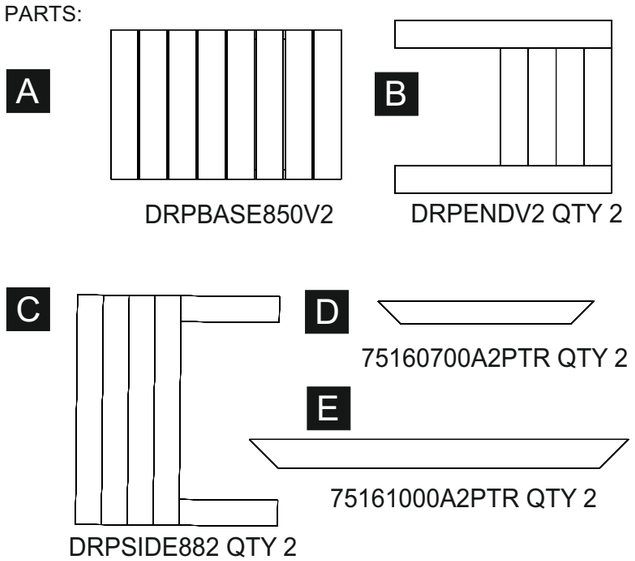

(FIXING PACK) DRPLANTFP

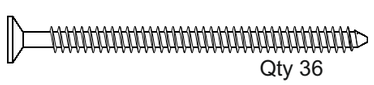

Qty 36

For further information

www.forestgarden.co.uk

1

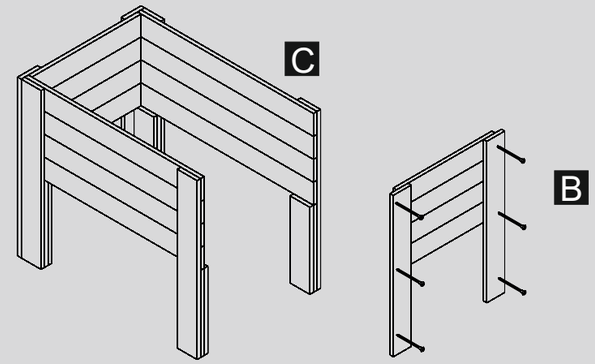

Place and fix the end sections against the sides using six screws as shown.
Make sure that you pre-drill first and that the screws are fully located in to the material.

2

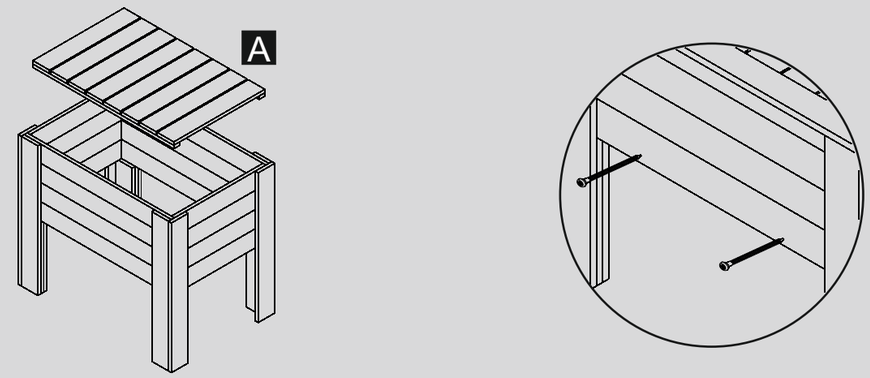

Place the base in to the planter so that it rests on the legs. Fix the base to in place screwing through each side using four screws spaced evenly.
Make sure that you pre-drill first and that the screws are fully located in to the material.

3

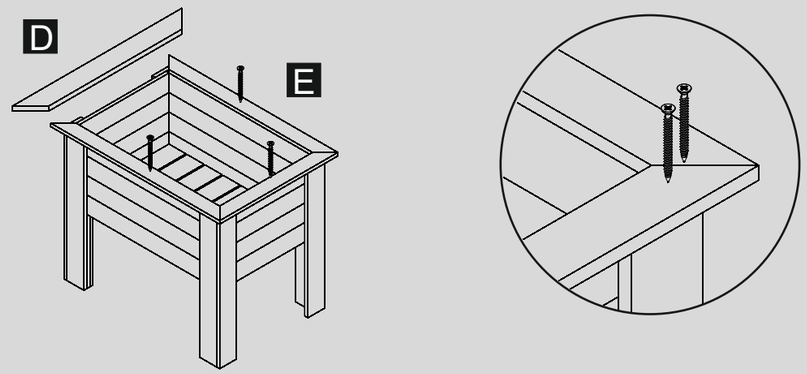

Place each of the cills on to the planter and fix at the corners using two screws for each. Further secure these using a single screw midway down each cill, screwing in to the board..
Make sure that you pre-drill first and that the screws are fully located in to the material.

Regularly check that all fixings are tight and secure.