ASSEMBLY

1. Assemble the seat (B/C) as shown in Fig. 1 using screws (H).

2. Lay one of the side assemblies (A) on a clean, flat area and attach the seat to the side assembly using screws (G). The seat should be positioned approximately 450mmfrom the bottom of the posts as Fig. 2.

3. Turn the assembly onto the seat back (B) so that the second side may be attached to the other end of the seat assembly.
Ensure the seat height is the same on both sides

4. Stand the assembly upright with care

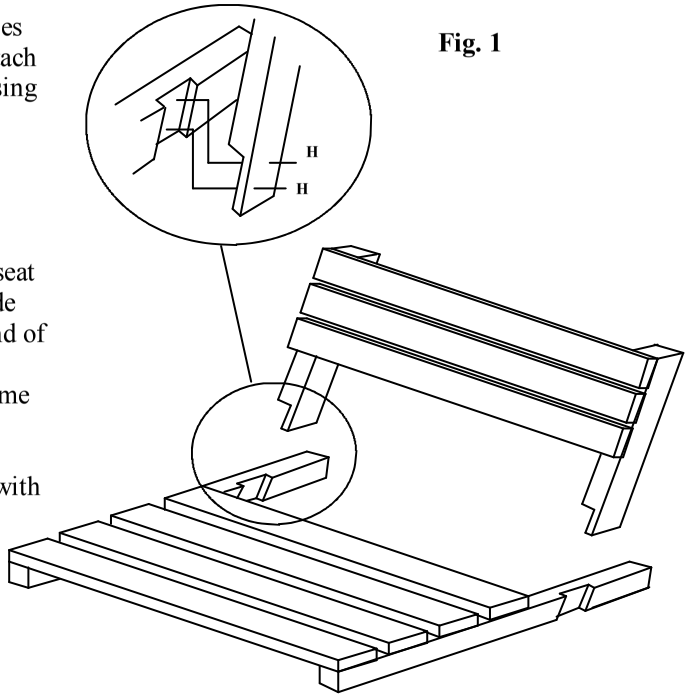

Fig. 1

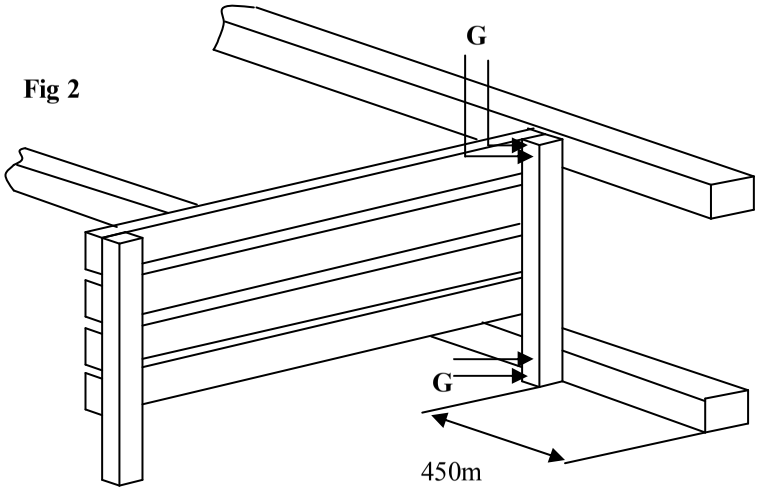

Fig 2

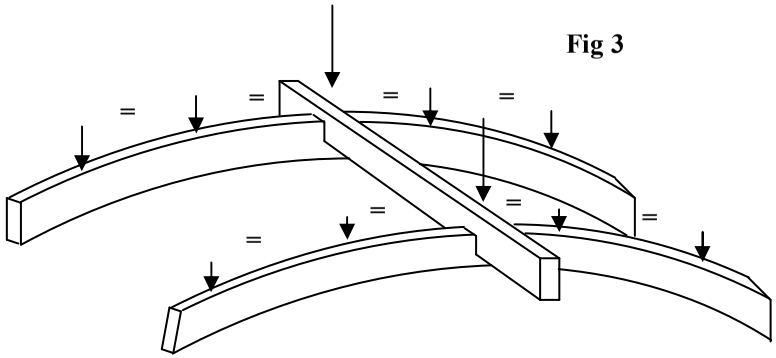

Fig 3

5. Take the two curved roof beams and mark the positions for the rafters. Start at the centre of the beams and mark two equally spaced positions either side of centre as Fig 3.

6. Fit the curved roof beams to the top of the posts ensuring the overhang at each end is the same using screws (G) as Fig 4.

7. The rafters should now be fitted at the positions marked on the beams using screws (J) .

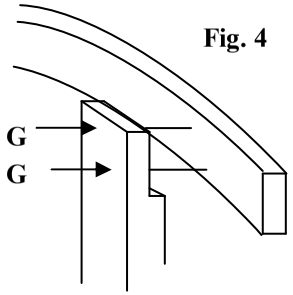

Fig. 4

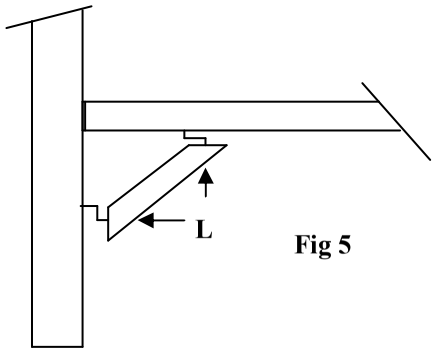

Fig 5

8. Finally fix the struts at the front of the arbour between the post and underside of the seat using screws (L) as Fig 5