DURAMAX™ ALL PURPOSE VINYL GARDEN SHEDS
A Product of USP US POLYMERS INC

Vinyl Garden Shed

OWNER'S MANUAL /
Instructions for Assembly '**8 Ft StoreAll**'
Size 8 Ft x 6 Ft / 2.4 m x 1.6 m (Approx.)

ISO 9001:2008

Ver: 0.0

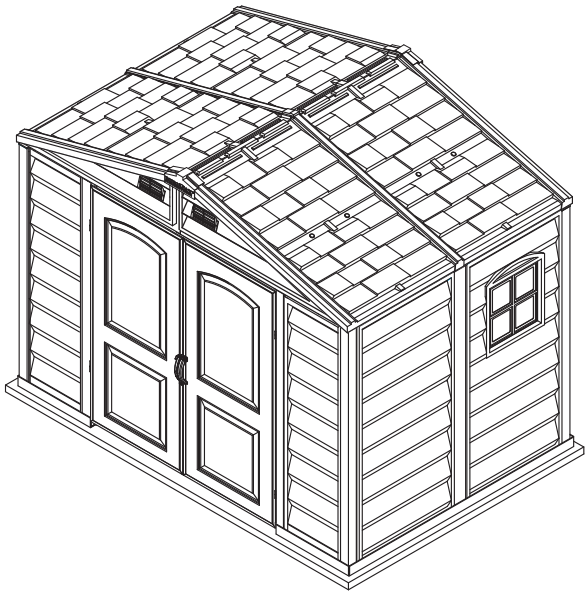

Customer Service Hotline
(800) 483-4674
www.duramaxbp.com

Your Total Solution To Maintenance Free Storage Sheds.

- All Weather Durable PVC
- Won't Dent, Rust, Rot or Mildew
- Tall Walk In Shed
- Never Needs Painting
- 61 Inch Wide Double Doors
- Easy Assembly
- High Wind Tested
- Snow Load Tested 18lbs/sq. foot
- Pad Lock Ready (Lock not included)
- Wooden or Cement Foundation Needed
- Shatter Proof Window included

Available Kits

- Foundation Kit Available

Call us for any missing or damaged parts.
Do not return to the store.

Building Dimensions :

Approximate Size	Storage		Exterior Dimension					Interior Dimension		Door Opening	
	Area	Volume	Base Dimension			Roof Edge to Edge		Wall to Wall			
				inch	cm	inch	cm	inch	cm	inch	cm
8 Ft x 6 Ft	39 Sq. Ft	238 1/4 Cu. Ft	Width	94 1/4	239.4	96 5/8	245.4	92 1/4	234.3	60 5/8	154
2.4 m x 1.6 m	3.6 Sq. m	6.8 Cu. m	Depth	63 1/8	160.3	66 1/8	168	61 1/8	155.2		
			Height			86 7/8	220.7	73	185.5	71 1/2	181.6

Duramax Garden Shed
Limited Fifteen Year Warranty

U.S. Polymer Inc. will send a replacement part free of charge, in the event of material defects and or workmanship for a period of fifteen years from the date of purchase.

This warranty is extended only to the original purchaser. A purchase receipt or other proof of date of original purchase will be required before warranty service is rendered. In no event shall we pay the cost of flooring, labor, installation or any other costs related thereto.

This warranty only covers failures due to defects in material or workmanship which occurs during normal use and does not extend to color change arising due to normal weathering or to damage resulting from misuse or neglect, commercial use, failure to follow assembly instructions and the owner's manual (including proper anchoring of the shed), painting, forces of nature and other causes which is beyond our control.

Claims under this warranty must be made within the warranty period by calling 1-800-483-4674 or mail in a dated sales slip and clear photograph of the part to:

U.S. Polymers, Inc.
1057 S. Vail Ave,
Montebello, CA 90640.

We reserve the right to discontinue or change components. If a component has been discontinued or is not available,
U.S. Polymers, Inc. reserves the right to substitute a component of equal quality as may be compatible.

Limits and Exclusions

There are no express warranties except as listed above. The warrantor shall not be liable for incidental or consequential damages resulting from the use of this product, or arising out of any breach of this warranty. All express warranties are limited to the warranty period set forth above . Some states do not allow the exclusion or limitation on how long an implied warranty lasts, so the above limitations may not apply to you.

This warranty gives you specific legal rights and you may also have other rights which vary from state to state or country to country.

SAFETY & PRECAUTIONS

Before You Begin...

1. Check your local building codes regarding footings, location, etc.

2. Select a site that allows enough working space around the shed.

3. Determine building foundation and anchor system.

4. Read and understand the Owner's manual enclosed in the package.

5. Follow all directions and dimensions thoroughly.

6. Follow the steps given in the manual carefully for correct assembly.

7. Make sure all parts are present before you start assembling.

8. BE SAFE : Follow safety instructions and avoid injury. (See inside page).

9. GROUND MUST BE EVEN : Make sure the foundation frame lies flat on the ground. If the earth bed is uneven, remove sod and other debris and level it with a flat shoval.

10. Separate contents of the carton by the part number and review the list.
Be sure you have all the necessary parts for your shed.
Refer Owner's manual for part list.

SAFETY & PRECAUTIONS

For your own safety, please read and follow these instructions during the shed assembly.

1. Always wear work gloves, long sleeves and eye protection during assembly of the shed. Some pieces of the shed contain sharp edges and can cause injury.

2. Be cautious with the tools used for the assembly of the shed.Familiarize yourself with the operation of all the power tools.

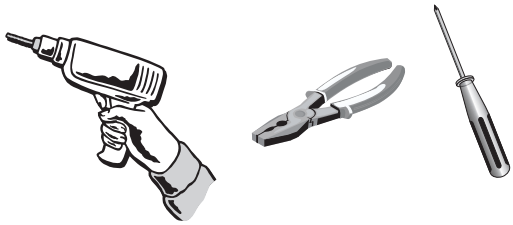

3. Children and pets should be kept away from the assembly site to avoid any distractions and accidents.

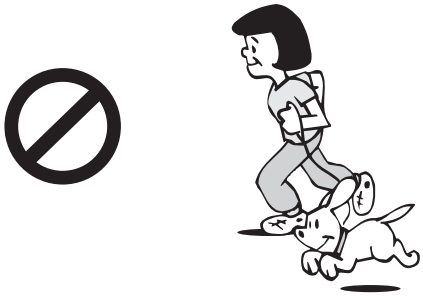

4. When using a step ladder, make sure it is on even ground and fully open with the safety latch in place. Never concentrate your full weight on the roof or any part of the shed.

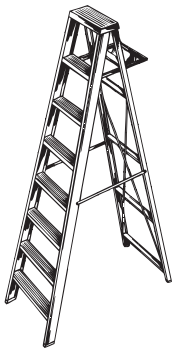

5. Do not attempt to assemble the shed on a windy day. Shed panels can be whipped across by the wind making the worksite difficult and dangerous.

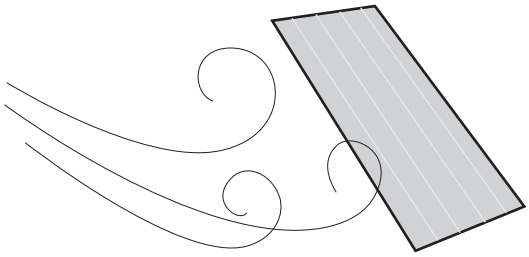

IMPORTANT

☞ Wear eye protection when using any form of power tools. Do not use voltage power tools in a wet or damp enviornment to avoid electric shock.

☞ Do not use any part of the shed as a means of personal support while attaching components during assembly.

☞ **The shed must be constructed on a solid base foundation.** A concrete pad or a large size concrete patio stone squares is recommended for suitable floor base. Make sure it is firm and level and will allow drainage away from the site. The base foundation should be at least 4 inches (100mm) larger than the shed dimensions. Please refer to the front page of your owner's manual for the exterior dimensions of the shed. **Manufacturer is not responsible for the choice and construction of the foundation.**

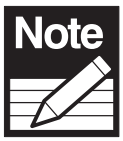

For a concrete pad base, prepare a level bed for a firm footing layer of crushed stone. The concrete pad should then be poured to a thickness of 4 inches (100mm) to 5 inches (125mm). Allow to dry thoroughly for at least 48 hours

☞ Your shed must be firmly anchored to the concrete pad or large concrete patio stone squares, to help protect against damage in high winds.

Care & Maintenance

Although this unit does not require any maintenance, care should be taken to prolong the life of your shed.

ROOF : Keep roof clean of leaves and snow with long handled, soft bristled broom. Heavy amounts of snow on the roof can damage the shed making it unsafe. **Do not step on the roof.**

WALLS : Do not rest any object against the wall panels of the shed.

DOORS : Keep doors closed to prevent wind damage.

FASTENERS : Regularly check your shed for loose screws, bolts, nuts, etc. And retighten them as necessary.

MOISTURE : With changing temperatures, condensation will accumulate inside the shed. Good ventilation will help in regulating and avoid moisture.

TIP : A noncorrosive caulking is helpful to seal the shed.

DO NOT store swimming pool chemicals in your building.
Combustibles and corrosive must be stored in
air tight containers

Parts List

PARTS			
CODE	QTY	CODE	QTY
B1LS	1	RS14W	4
B1RS	1	RS15Q	2
B2W	2	DSHQ	1
B21Q	1	MJ	2
B22Q	1	CMA	4
CB1S	2	CCQ	4
CB2W	2	CDLA	1
CB2Q	1	CDRA	1
CB3Q	1	SP↑	6
CB4W	2	SPAW↑	1
RS1LW	2	FSPA↑	2
RS1RW	2	FPLB1	2
RS2LW	3	FPRB1	2
RS2RW	3	R1LW↑	1
RS3LQ	2	R3LW↑	1
RS5W	1	R1RW↑	1
RS8W	4	R3RW↑	1
RS9W	4	DL	1
RS6W	2	DR	1
RS12W	1		

ACCESSORIES	
CODE	QTY
FDCL	1
FDCR	1
FCC	4
FMC	4
CCF	4
CMF	1
RJ	4
EC	2
PPG	65
PIN	65
PPGL	1
PINL	1
L	1
R	1
S1	159
S2	13
S7	16

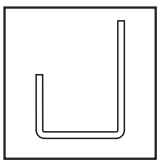
B21Q, B22Q, B2W, B1LS, B1RS

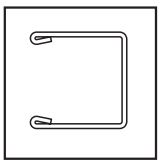
MJ

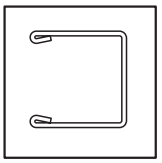
RS1LW, RS1RW, RS8W, RS9W, RS3LQ

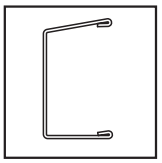
RS6W

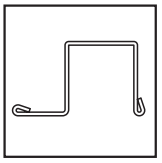
RS2LW, RS2RW

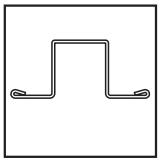
RS12W

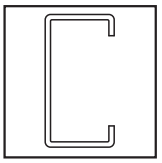
DSHQ

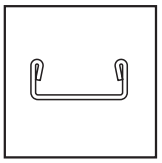
RS14W, CB1S, CB2Q, CB3Q, CB2W, CB4W

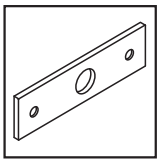
RS15Q

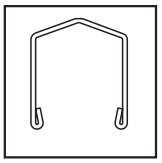
RS5W

Note

Before starting installation, please refer Safety & Precautions.

Tools You Will Need

Cordless Drill - Philips Head
Hammer or Rubber mallet
Carpenters Square
8' Step Ladder
Adjustable pliers
Level - 3ft.
Tape Measure
Caulk Gun
Waterproof Clear Silicon
Hand Gloves

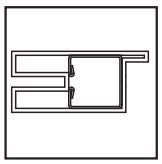
CDLA

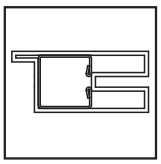
CDRA

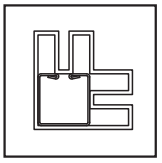
CCQ

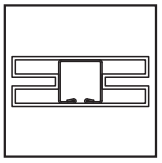
CMA

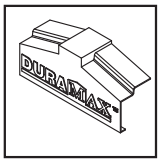

EC

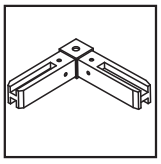
RJ

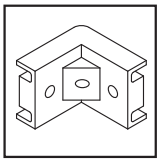
CCF

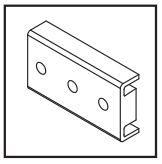
CMF

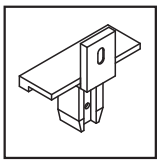
FMC

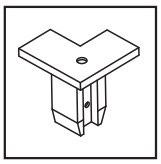
FCC

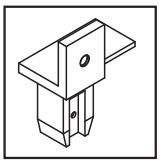
FDCL

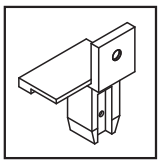
FDCR

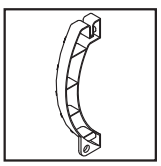
L

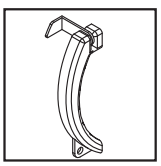
R

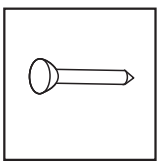
PIN & PINL

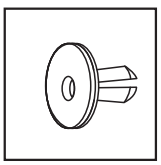
PPG & PPGL

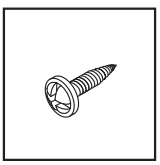
S1, S2, S7

Exploded View

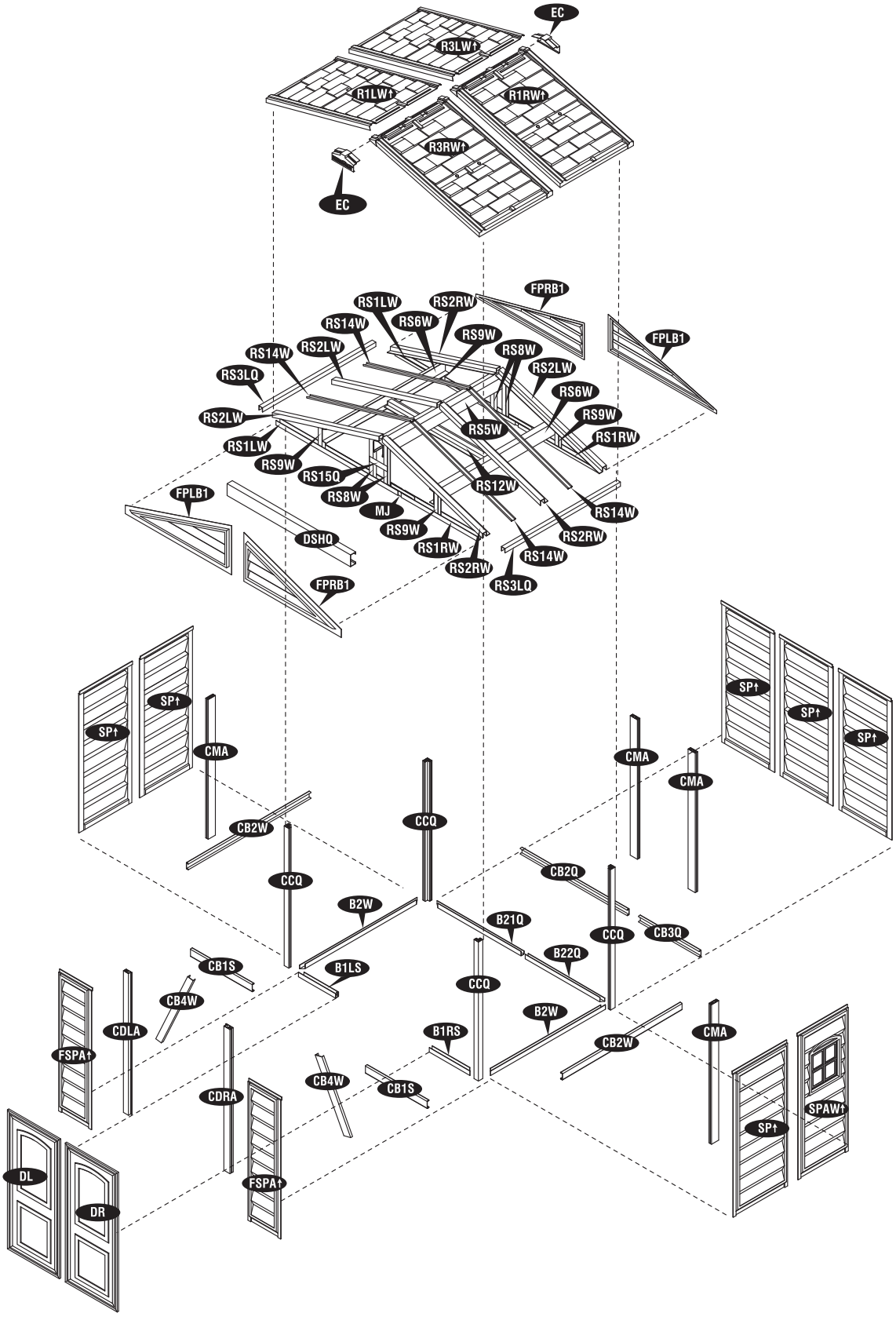

A. Foundation

Note : If you have DURAMAX Foundation, please follow instruction manual in that package. If not, follow below wooden platform instruction.

DuraMax must be installed on a level wooden platform or a level concrete foundation.

Wooden Platform (Not Included)

The following are the list of lumber and sizes you will need.

Pressure Treated - Wood Studs:
4ea 2" x 3 1/2" x 87 7/8" (50mm x 88.9mm x 2232.2 mm)
2ea 2" x 3 1/2" x 63 3/4" (50mm x 88.9mm x 1620 mm)

Exterior Grade (CDX) - 3/4" (19mm) plywood
1ea 3/4" x 48" x 94 7/8" (19mm x 1219.2mm x 2410mm)
1ea 3/4" x 15 3/4" x 94 7/8" (19mm x 400.8mm x 2410mm)

L-Brackets: 4ea

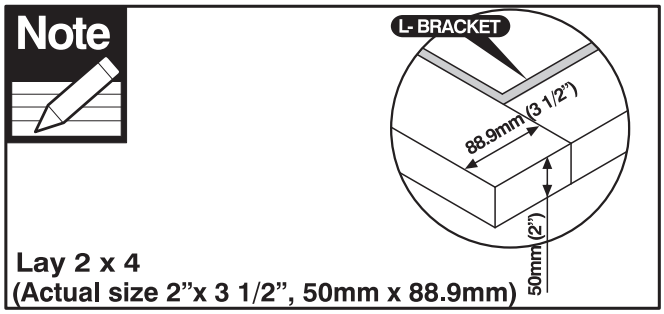

1. Use pressure treated wood studs **2 x 4 (Actual size 2" x 3 1/2", 50mm x 88.9mm)** to create a platform frame that has an outside dimension of **63 3/4" x 94 7/8" (1620mm x 2410mm)**.

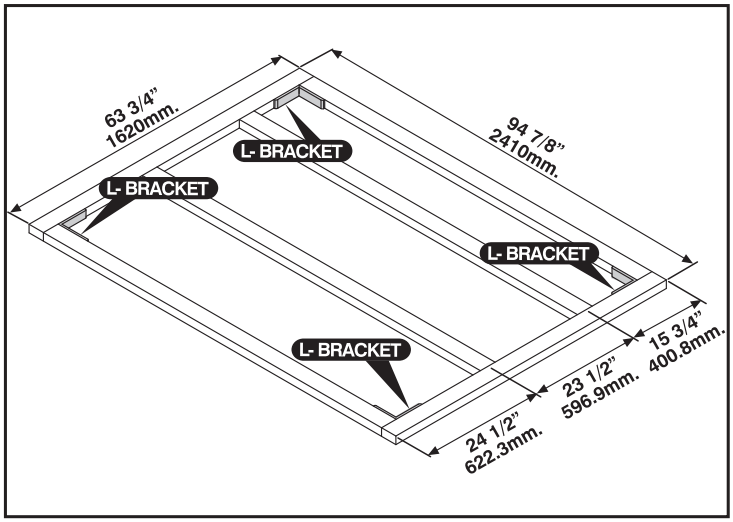

2. Using exterior grade **CDX 3/4" (19mm)** plywood, cut and fit together the sheets to form solid foundation as shown. Foundation must be square and level.

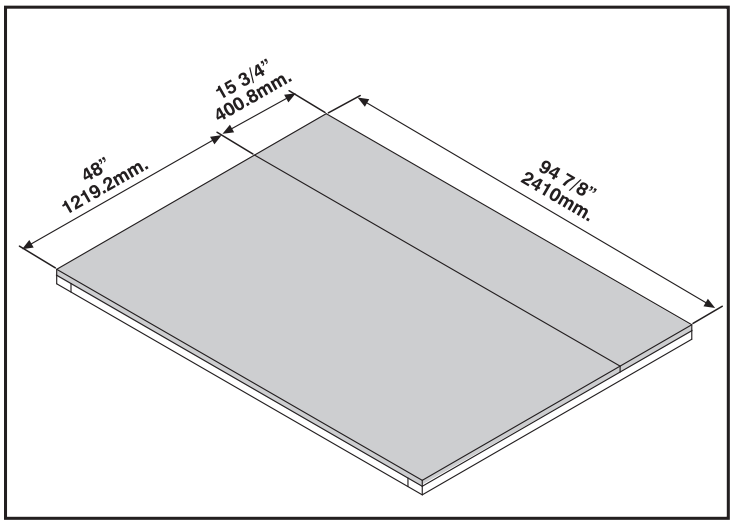

Note **If the shed is assembled with wooden foundation on soil, use the soil anchor kit.**

Concrete Platform

The shed must be constructed on a solid base foundation. A concrete pad or a large size concrete patio stone squares is recommended for suitable floor base. Make sure it is firm and level and will allow drainage away from the site. The base foundation should be at least 4 inches(100mm)larger than the shed dimensions. Please refer to the front page of your owner's manual for the exterior dimensions of the shed. **Manufacturer is not responsible for the choice and construction of the foundation**

Note ***For a concrete pad base, prepare a level bed for a firm footing layer of crushed stone. The concrete pad should then be poured to a thickness of 4 inches (100mm) to 5 inches (125mm). Allow to dry thoroughly for at least 48 hours***

B. Base Frame

Note

1. It is important that these instructions are followed step by step.
2. All parts are clearly marked and care should be taken to use the correct one.
3. Don't install under windy conditions.
4. If you are building the shed against a wall, build it 2.5 ft. away then slide it in.

Parts Needed:

Code	Qty
B1LS	1
B1RS	1
B21Q	1
B22Q	1
B2W	2
S1	22

1

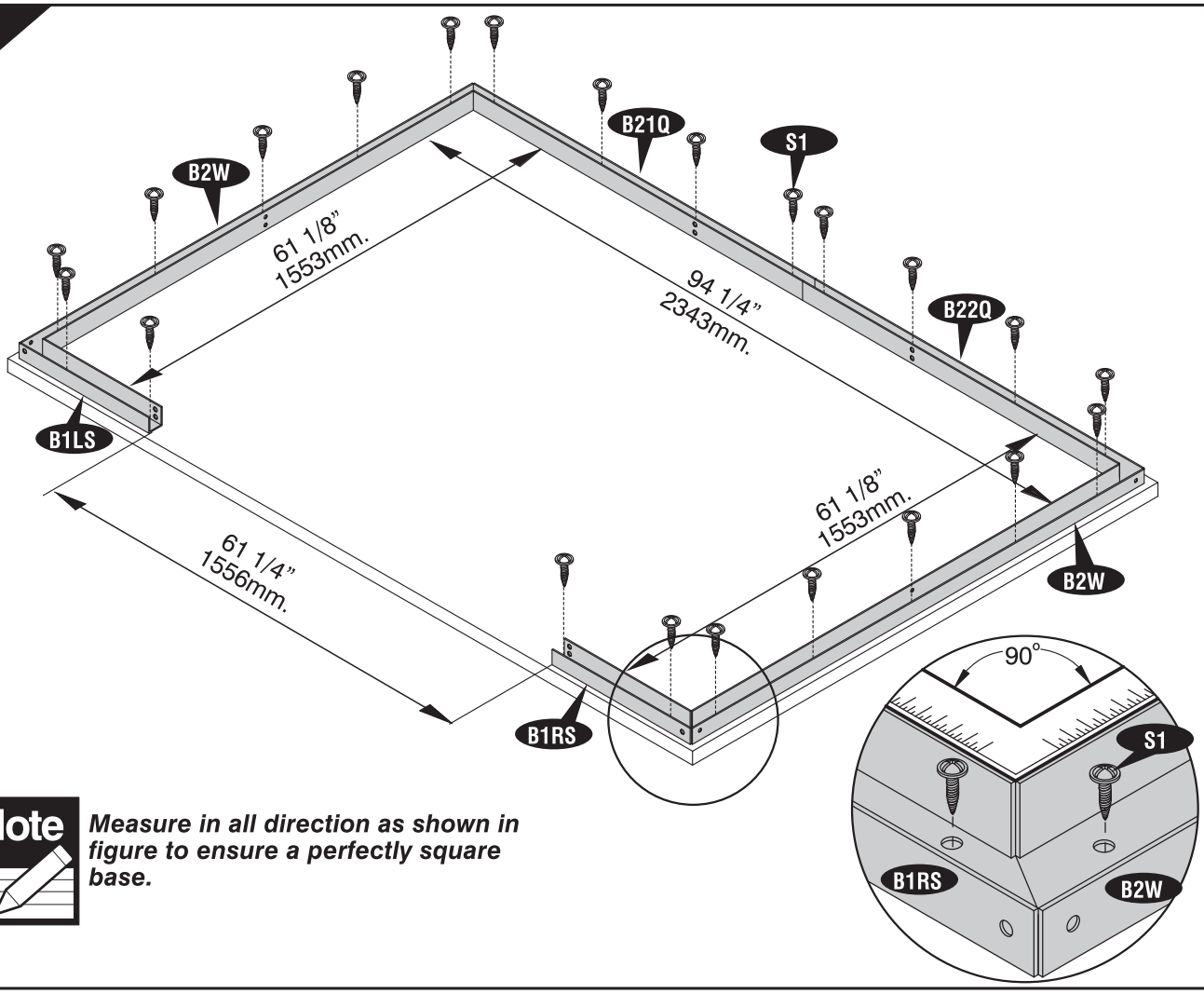

Note

Measure in all direction as shown in figure to ensure a perfectly square base.

Assembly on concrete foundation

Using a carpenter square, line up corners. Align base bars, mark the concrete at the holes in the base and drill concrete with suitable concrete bit to accept 1/4" x 1 1/2" (M6 x 40mm) anchor bolts. (Qty - 22Nos. not provided).

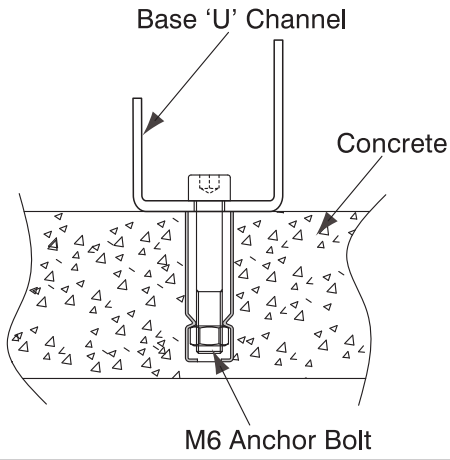

C. Wall & Columns

Parts Needed:

Code	Qty
CCQ	4
CDLA	1
CDRA	1
CMA	4
CB1S	2
CB2W	2
CB2Q	1
CB3Q	1
CB4W	2
CCF	4
CMF	1
SP↑	6
SPAW↑	1
FSPA↑	2
S1	39
S2	5

Note

All parts are clearly marked and care should be taken to use the correct one.

1

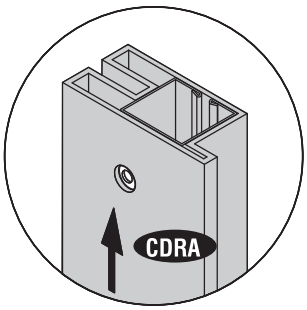

Fig.1

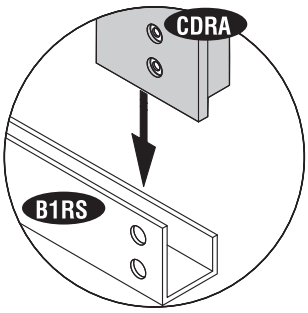

Fig.2

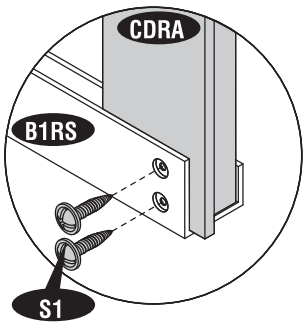

Fig.3

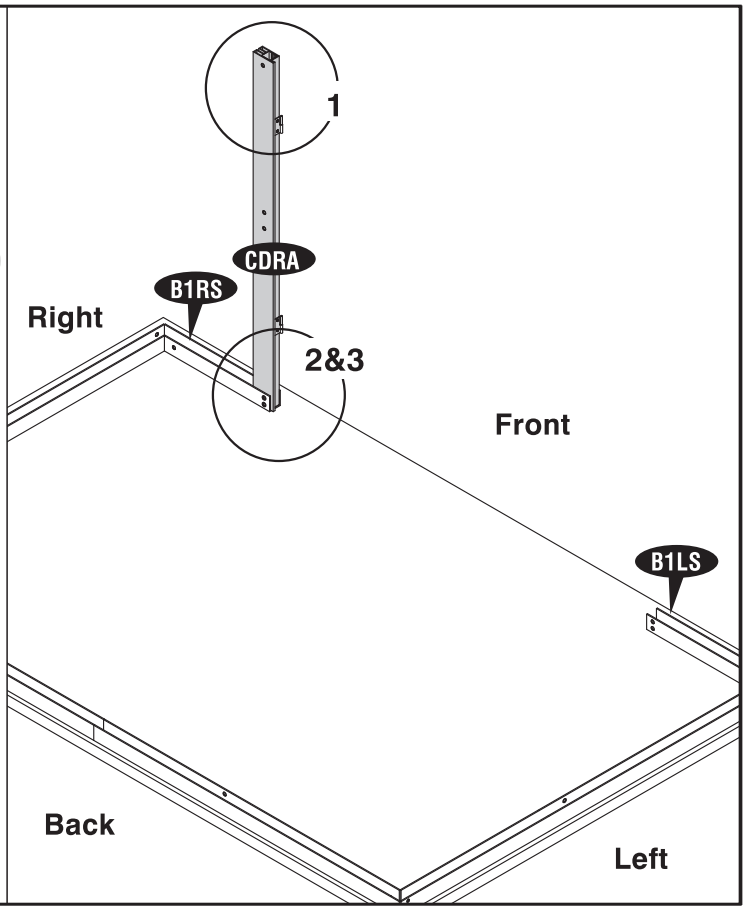

2

Note *Check the stamped label on top of all panels inside.*

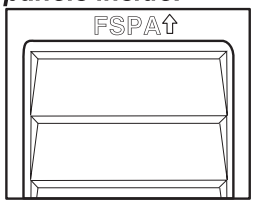

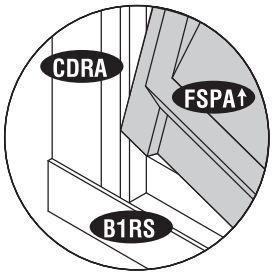

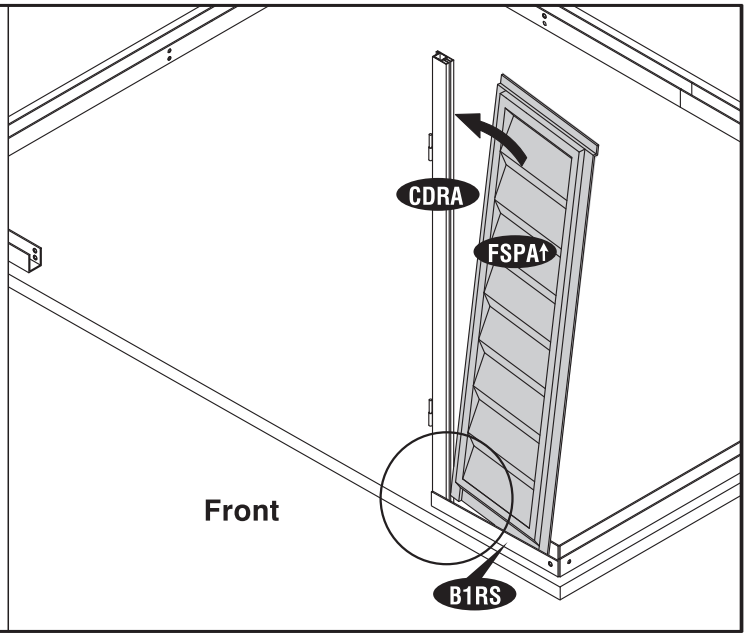

3

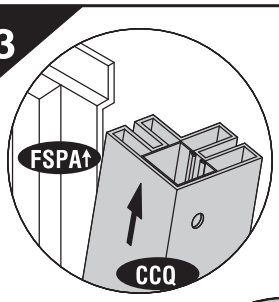

Fig.1

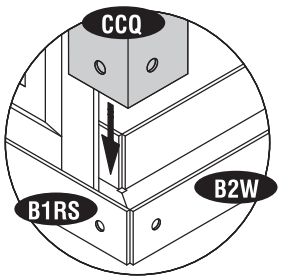

Fig.2

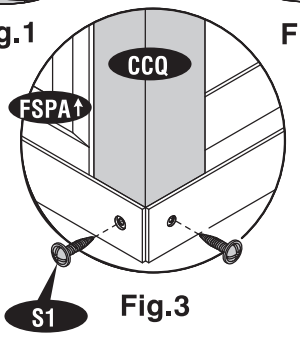

Fig.3

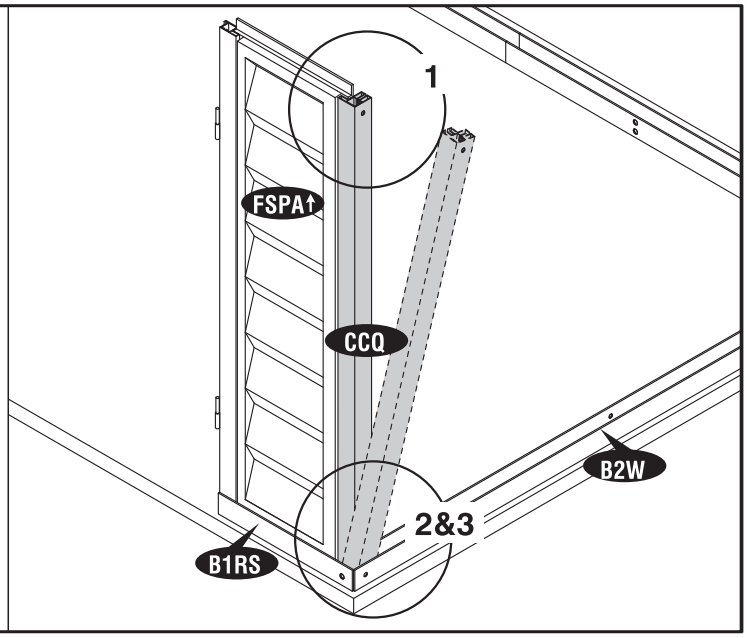

4

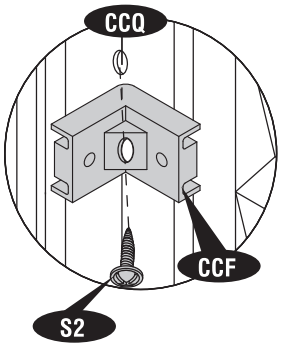

Fig.1

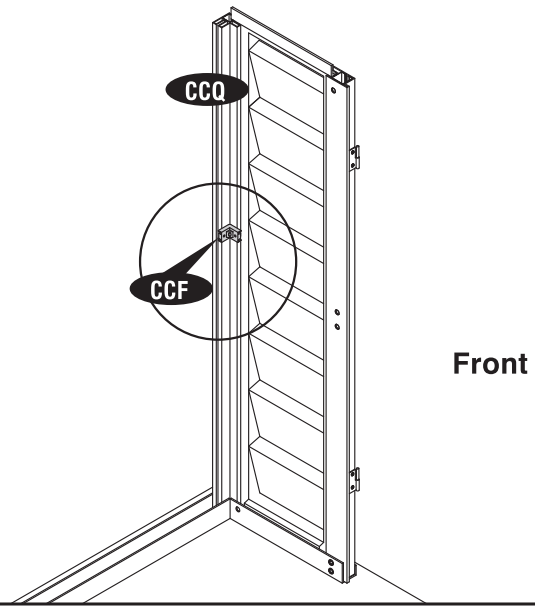

5

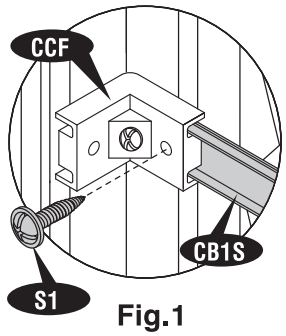

Fig.1

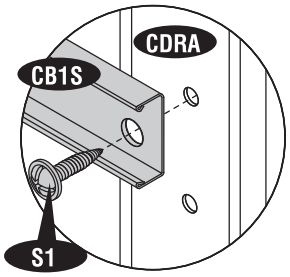

Fig.2

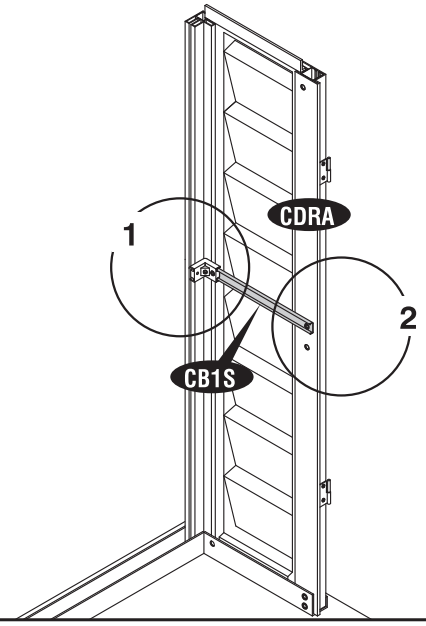

Front

6

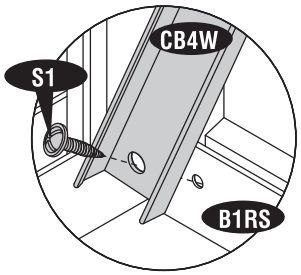

Fig.1

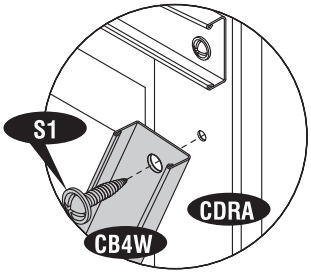

Fig.2

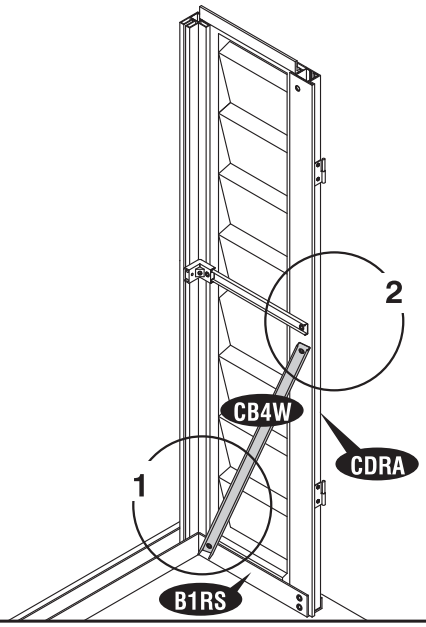

7

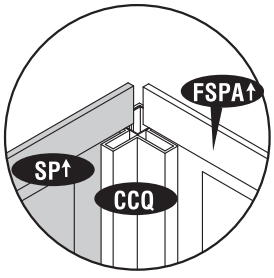

Fig.1

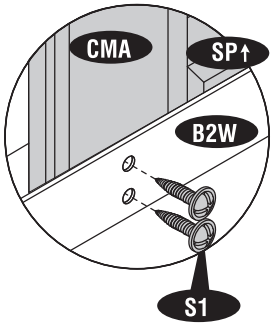

Fig.2

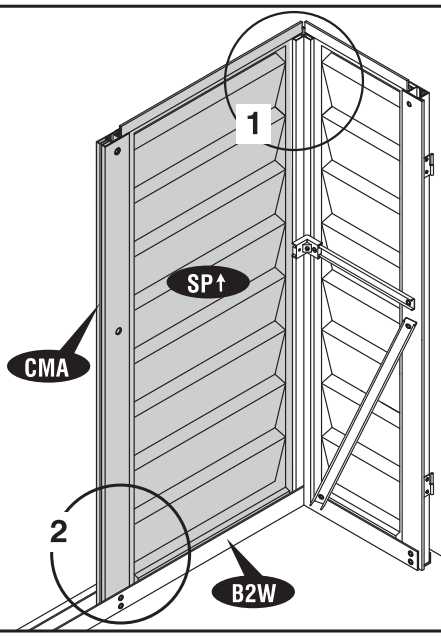

8

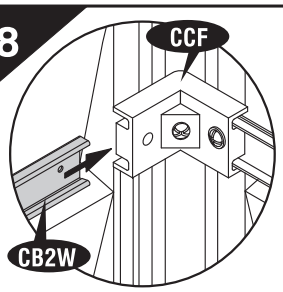

Fig.1

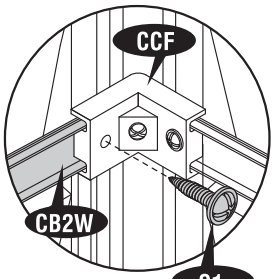

Fig.2

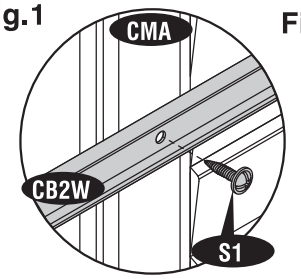

Fig.3

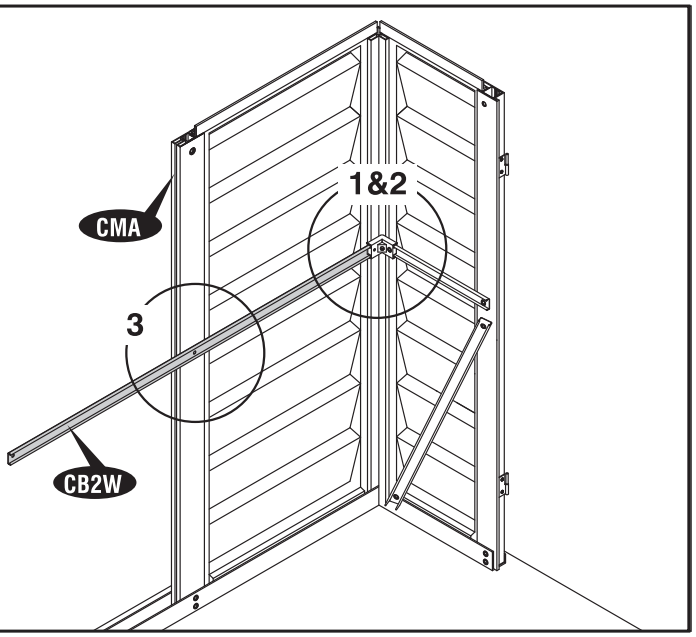

9

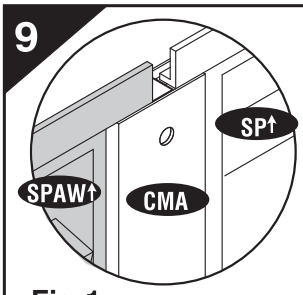

Fig.1

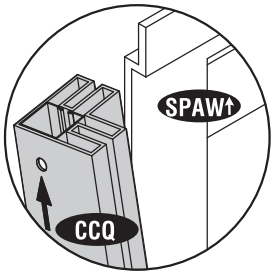

Fig.2

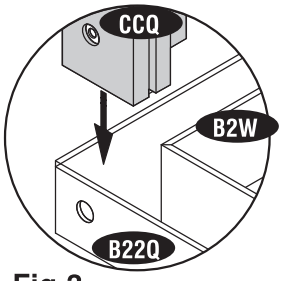

Fig.3

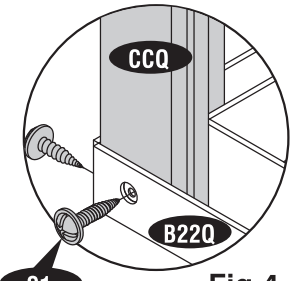

Fig.4

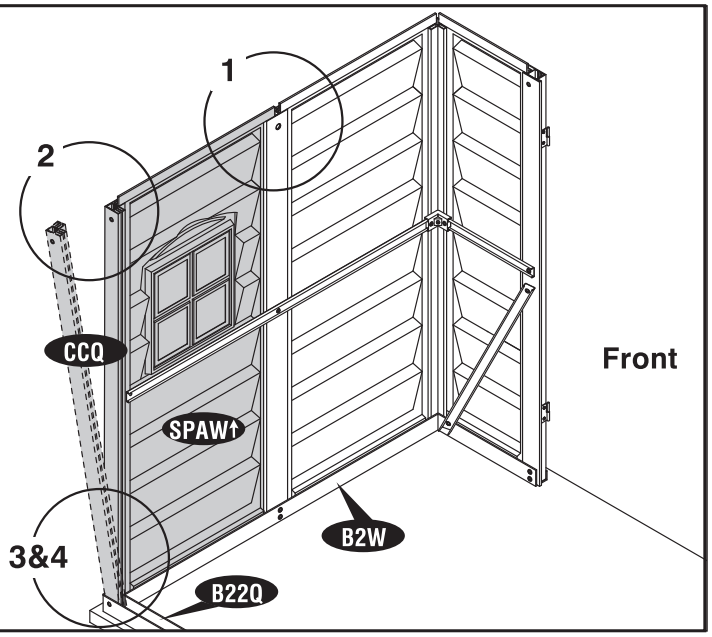

10

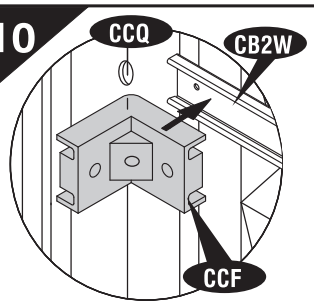

Fig.1

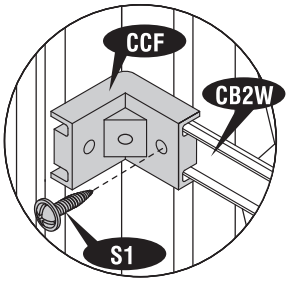

Fig.2

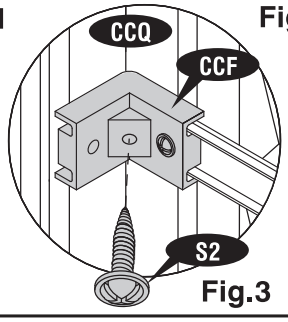

Fig.3

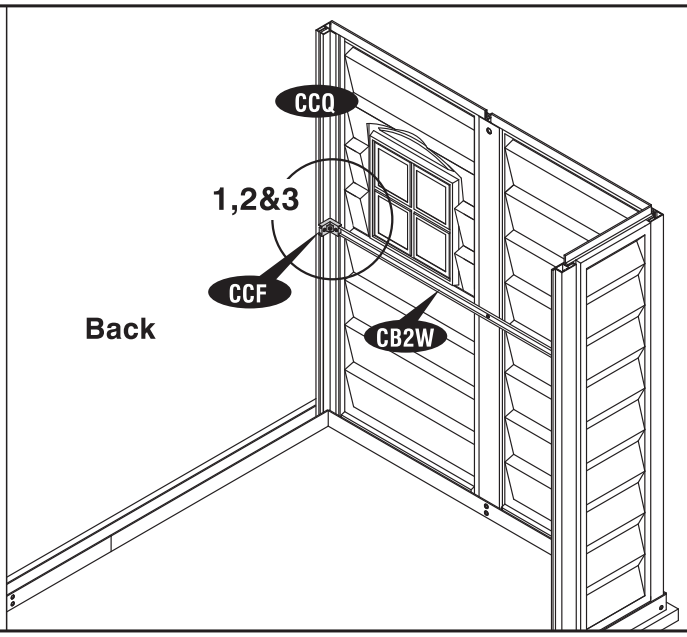

11

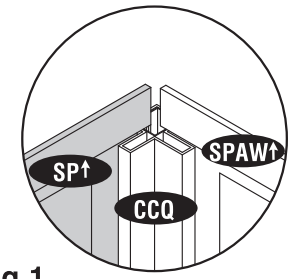

Fig.1

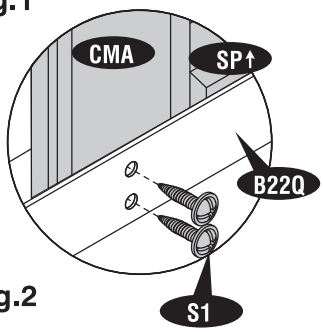

Fig.2

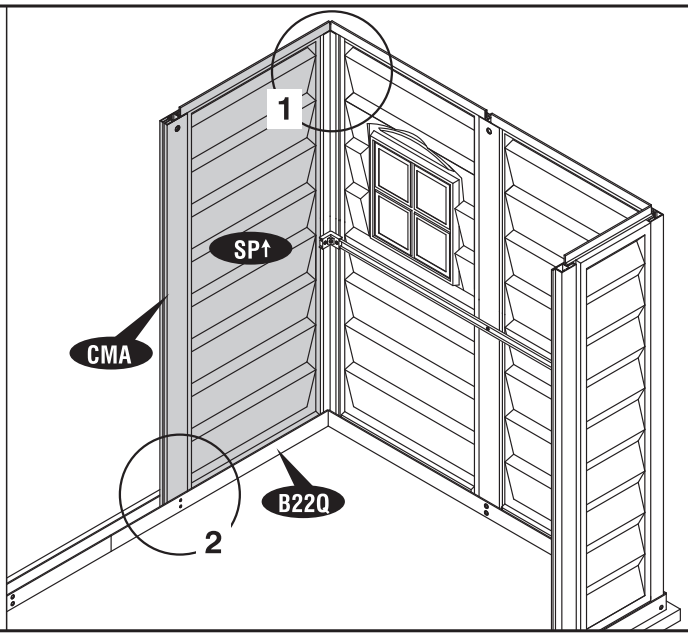

12

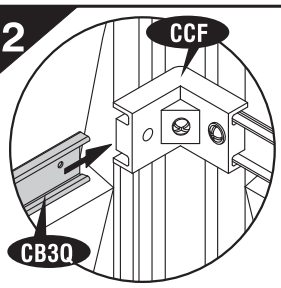

Fig.1

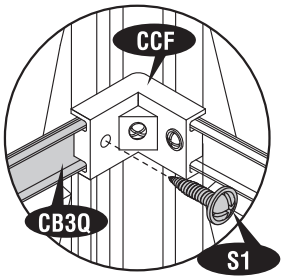

Fig.2

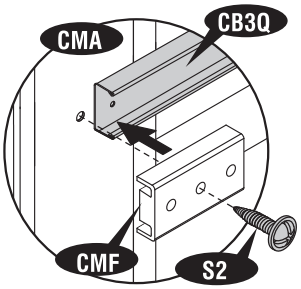

Fig.3

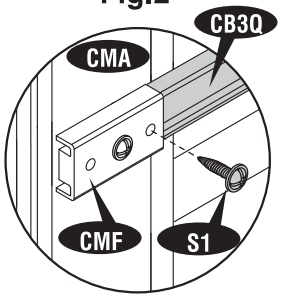

Fig.4

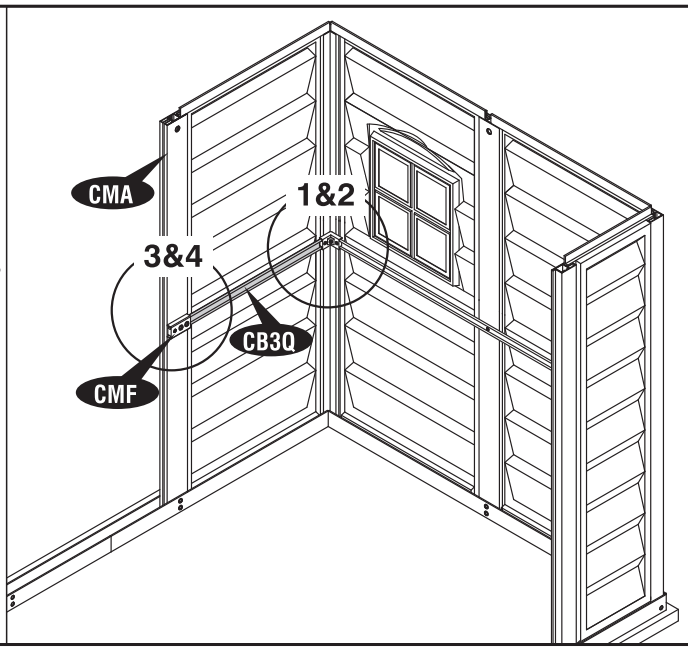

13

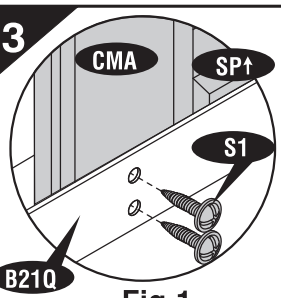

Fig.1

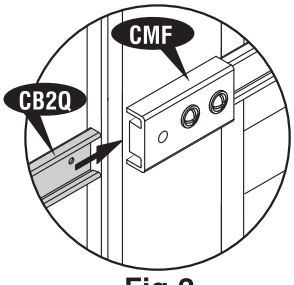

Fig.2

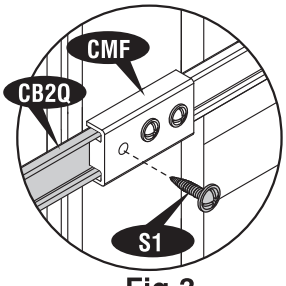

Fig.3

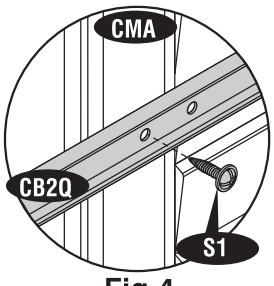

Fig.4

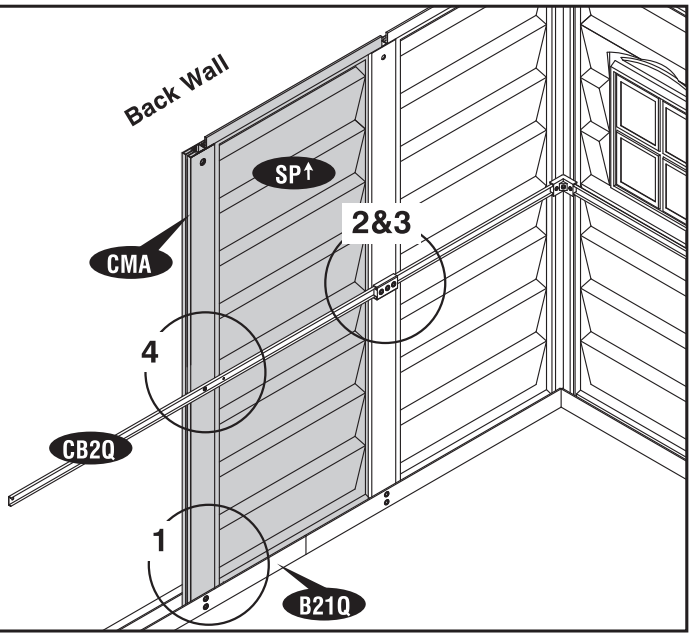

14

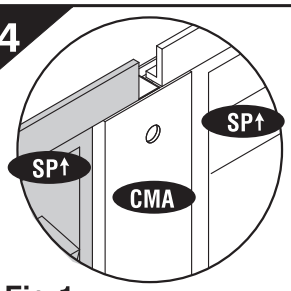

Fig.1

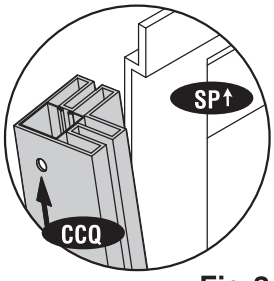

Fig.2

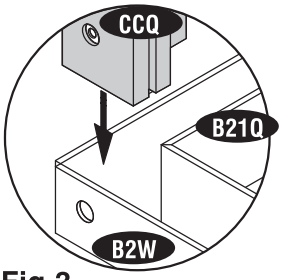

Fig.3

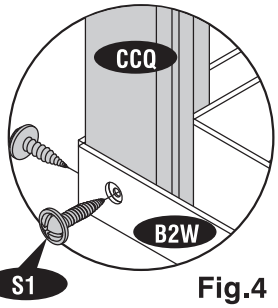

Fig.4

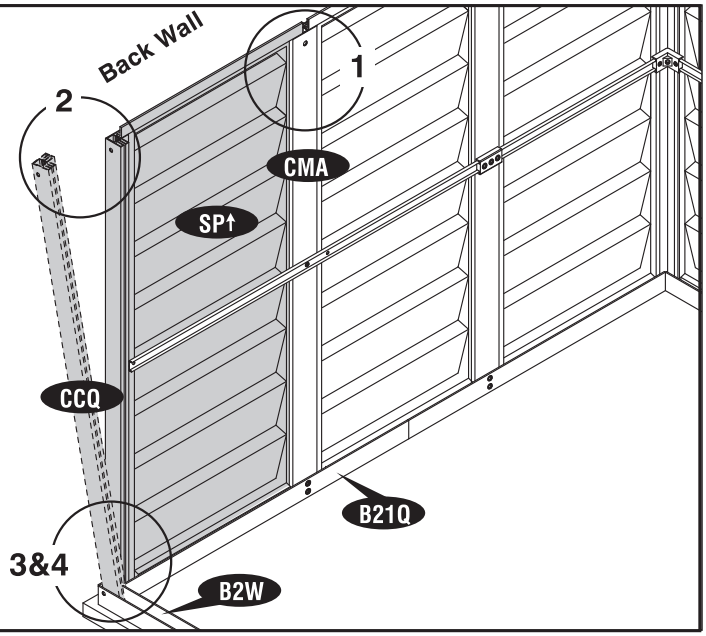

15

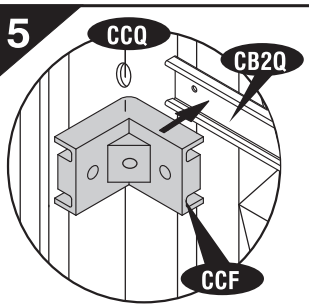

Fig.1

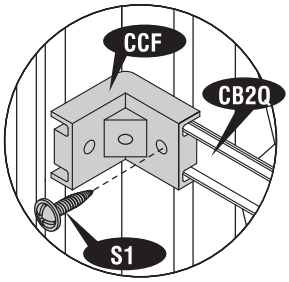

Fig.2

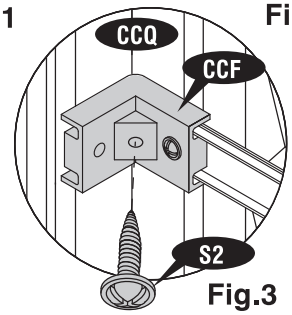

Fig.3

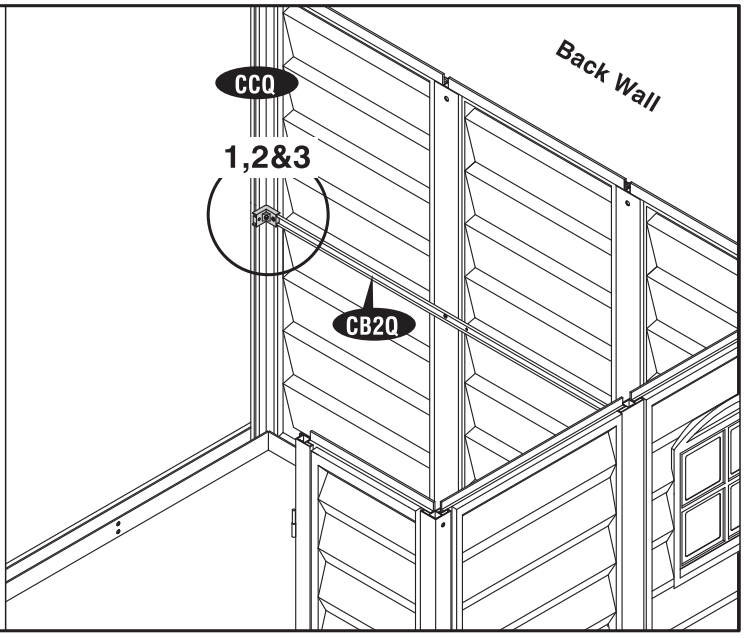

16

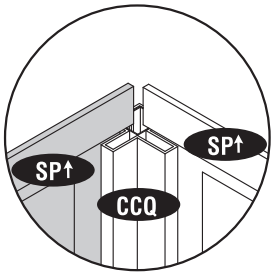

Fig.1

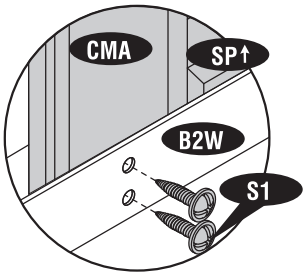

Fig.2

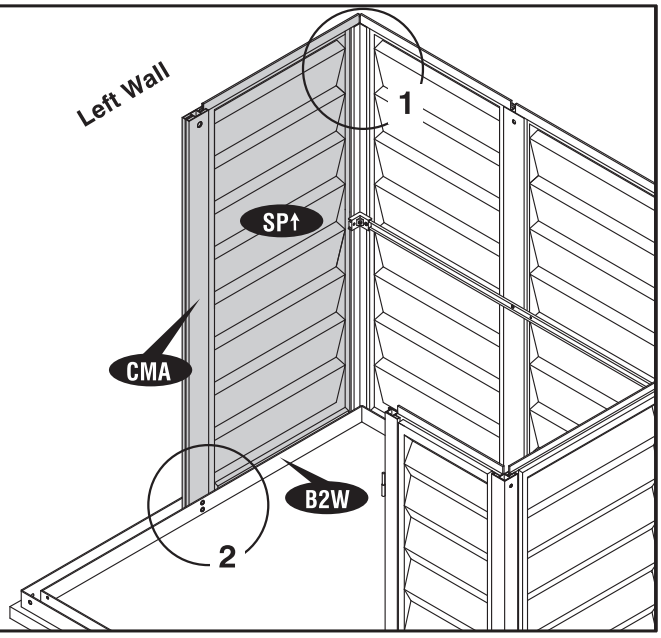

17

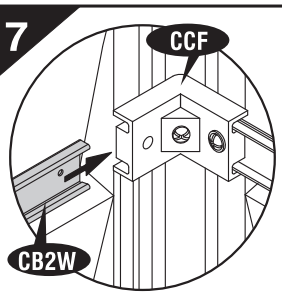

Fig.1

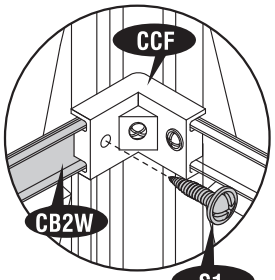

Fig.2

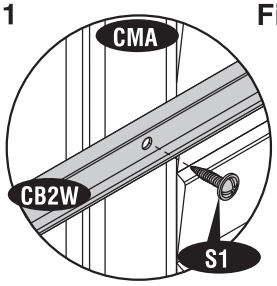

Fig.3

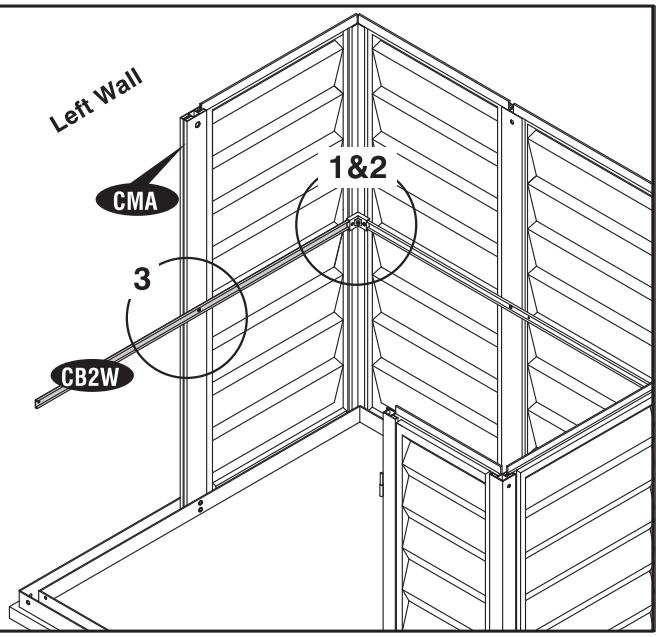

18

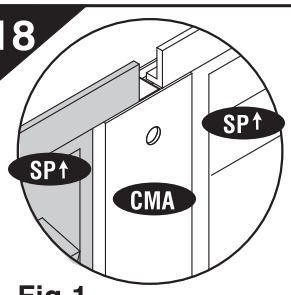

Fig.1

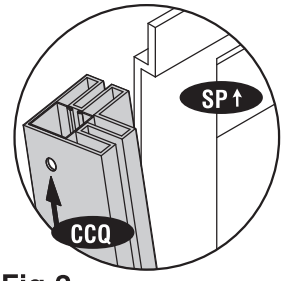

Fig.2

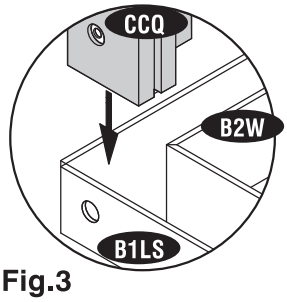

Fig.3

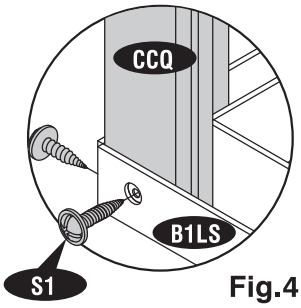

Fig.4

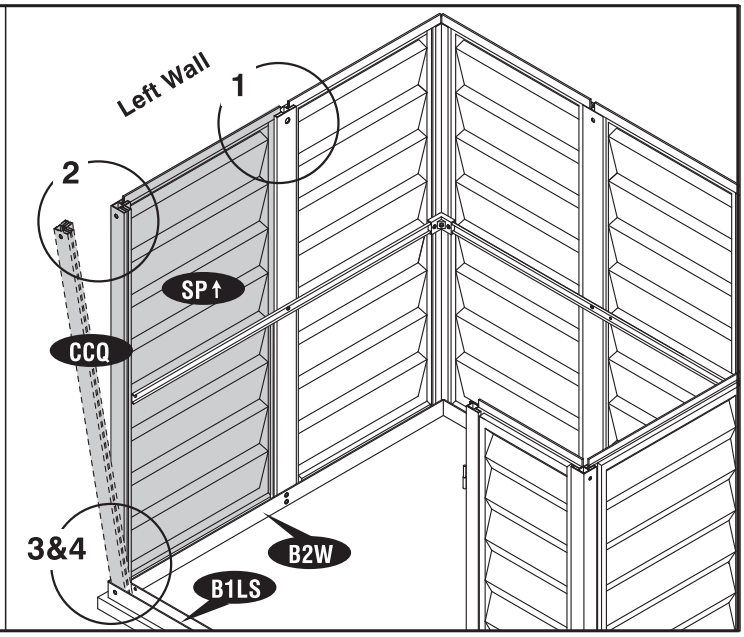

19

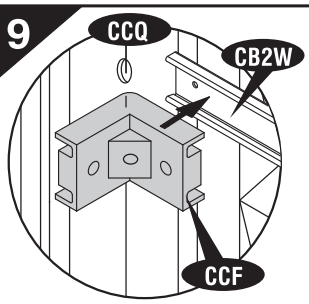

Fig.1

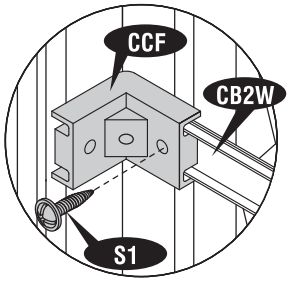

Fig.2

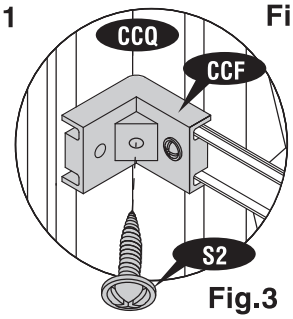

Fig.3

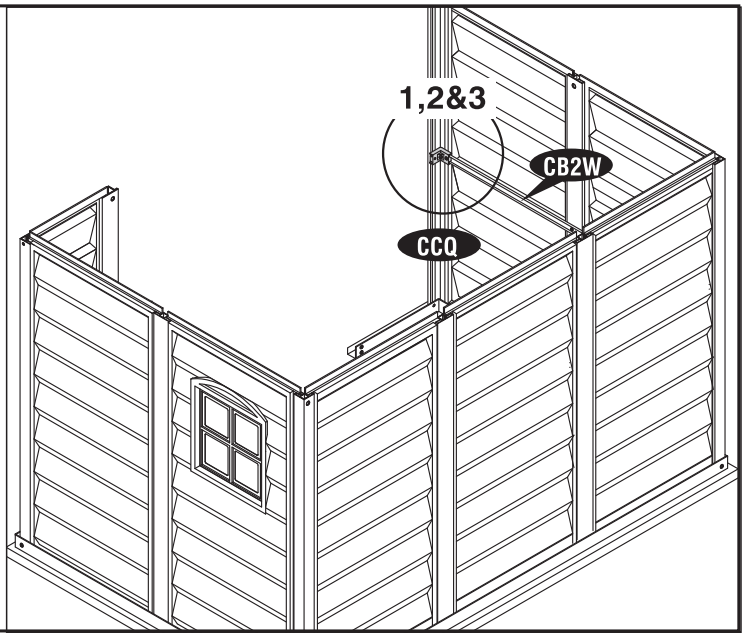

20

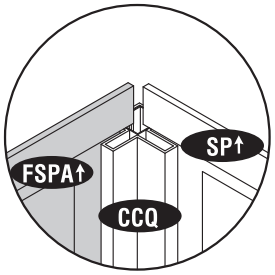

Fig.1

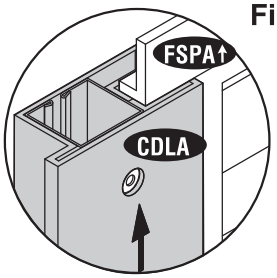

Fig.2

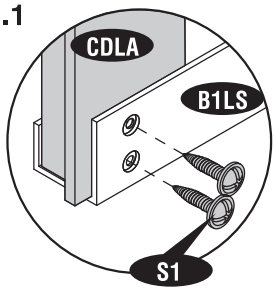

Fig.3

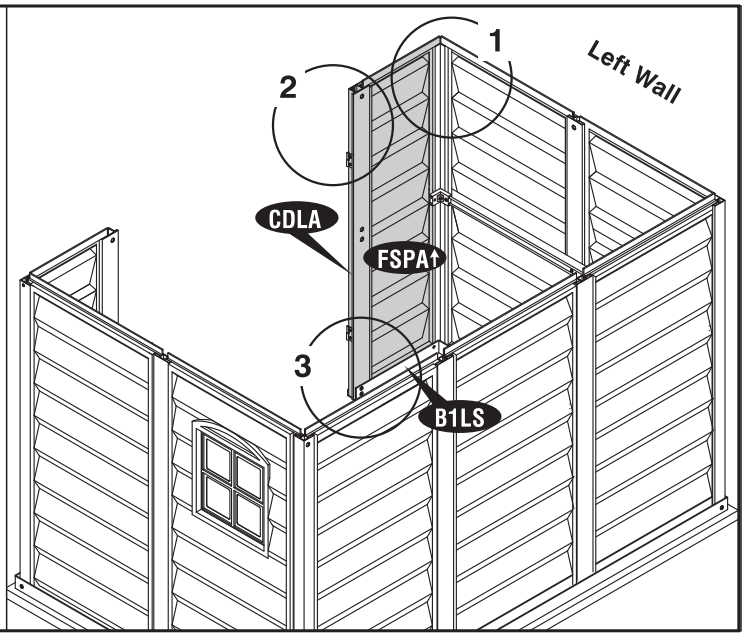

21

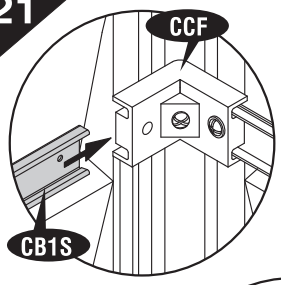

Fig.1

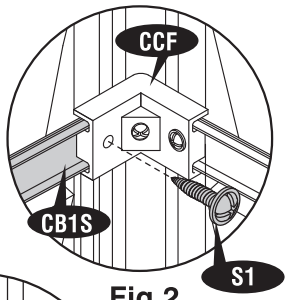

Fig.2

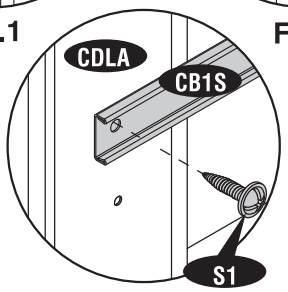

Fig.3

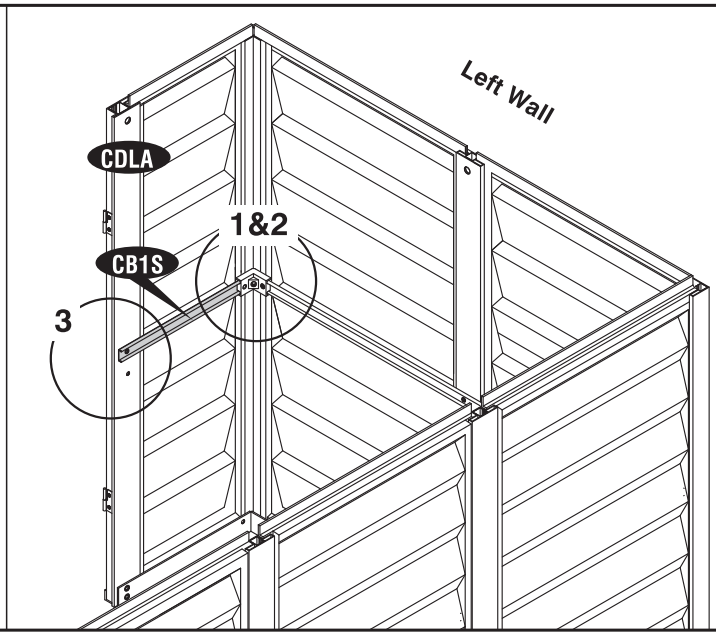

22

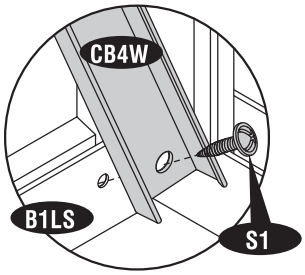

Fig.1

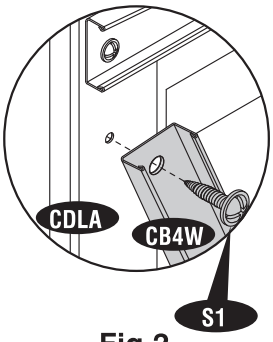

Fig.2

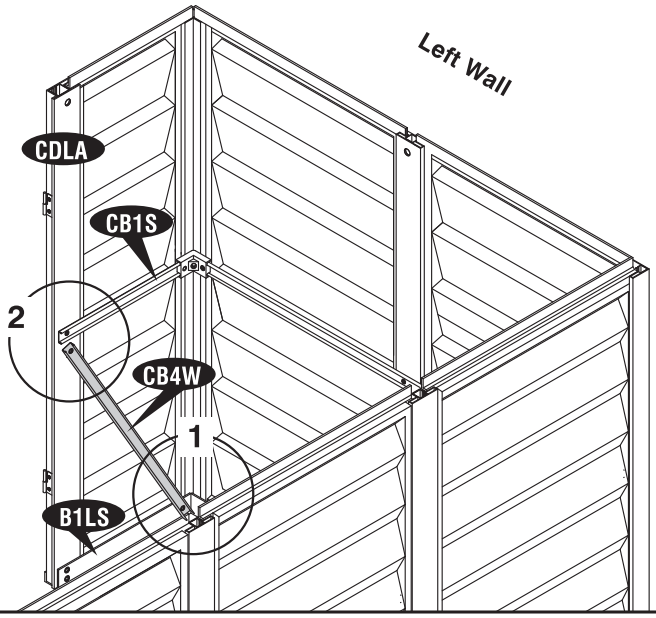

23

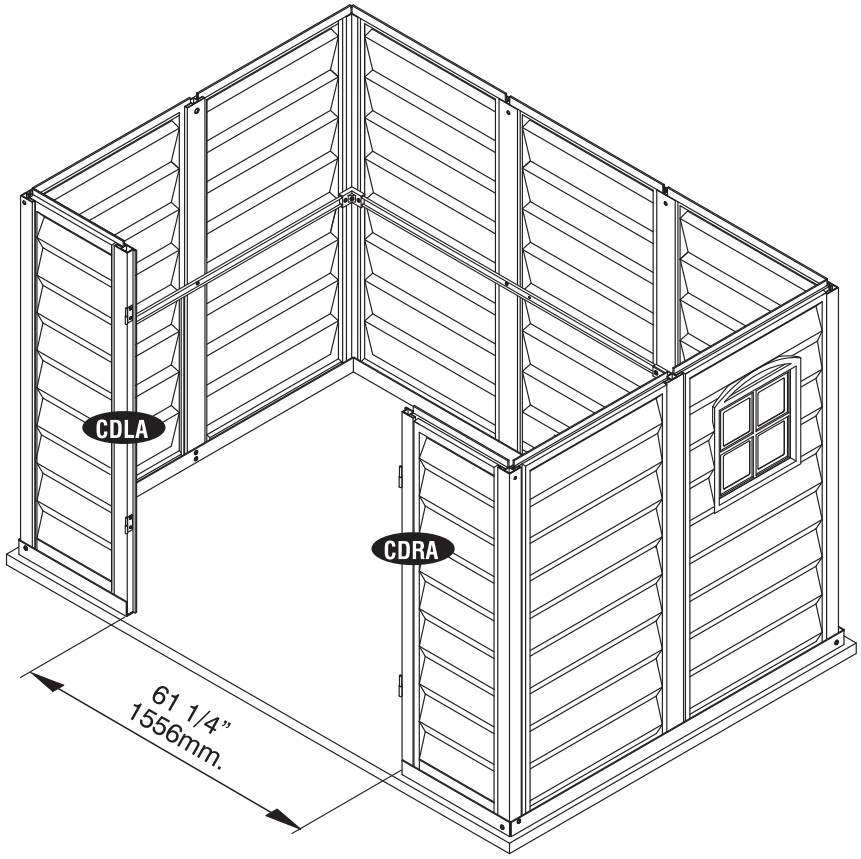

D. Roof Structures

Parts Needed:

Code	Qty	Code	Qty
RS1LW	2	RS15Q	2
RS1RW	2	MJ	2
RS2LW	3	DSHQ	1
RS2RW	3	FDCL	1
RS3LQ	2	FDCR	1
RS5W	1	FCC	4
RS6W	2	FMC	4
RS8W	4	RJ	4
RS9W	4	S1	98
RS12W	1	S2	4
RS14W	4	S7	16

1

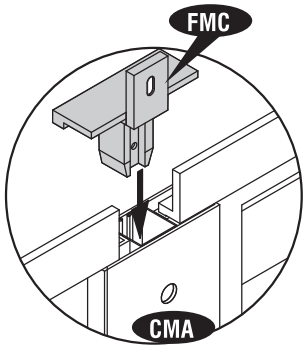

Fig.1

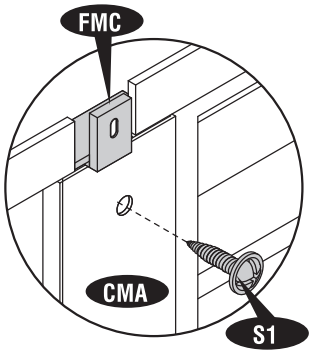

Fig.2

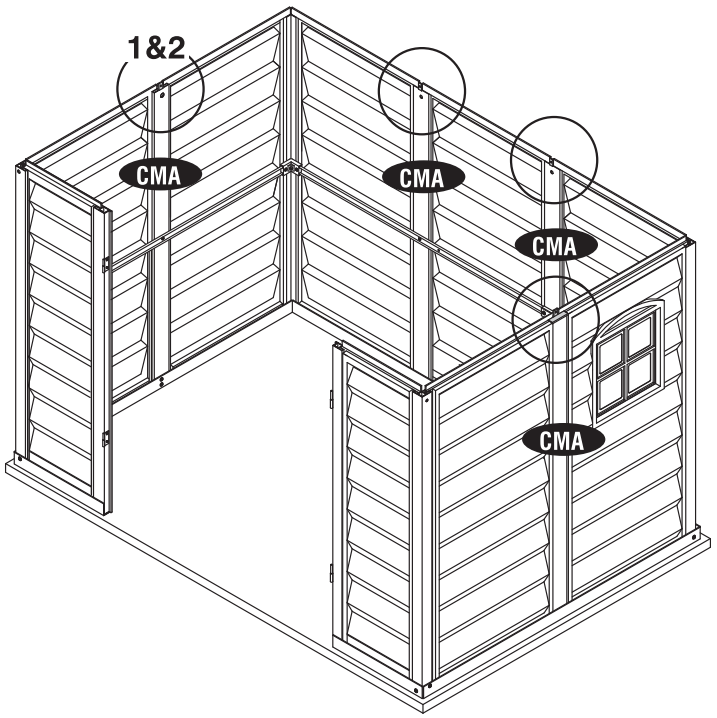

2

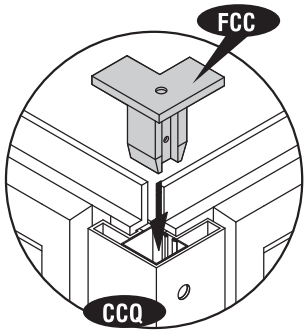

Fig.1

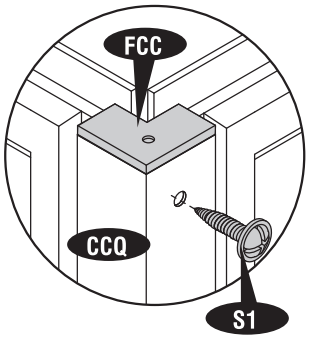

Fig.2

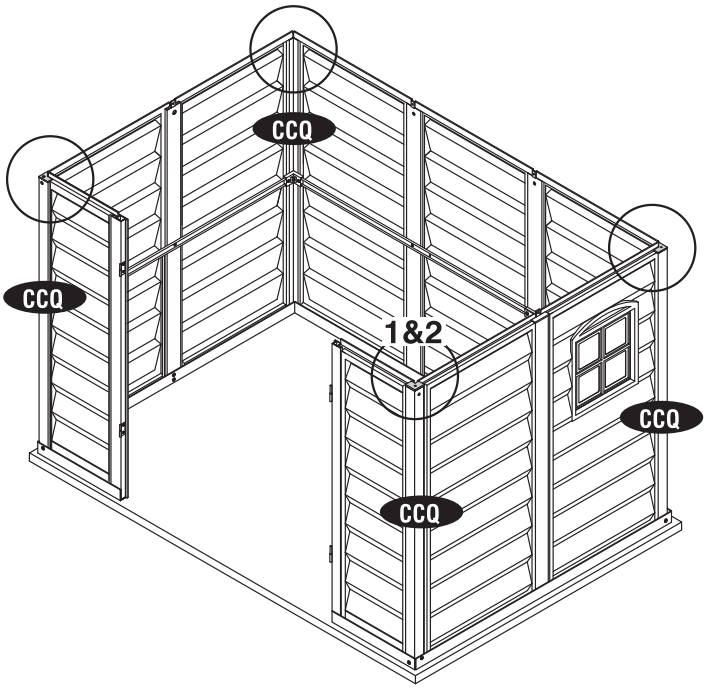

3

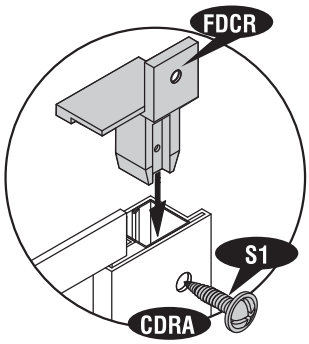

Fig.1

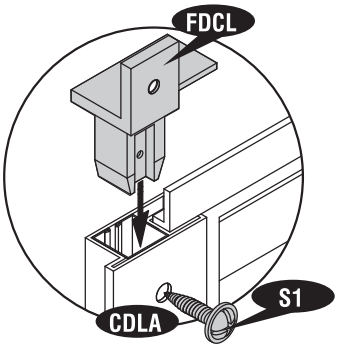

Fig.2

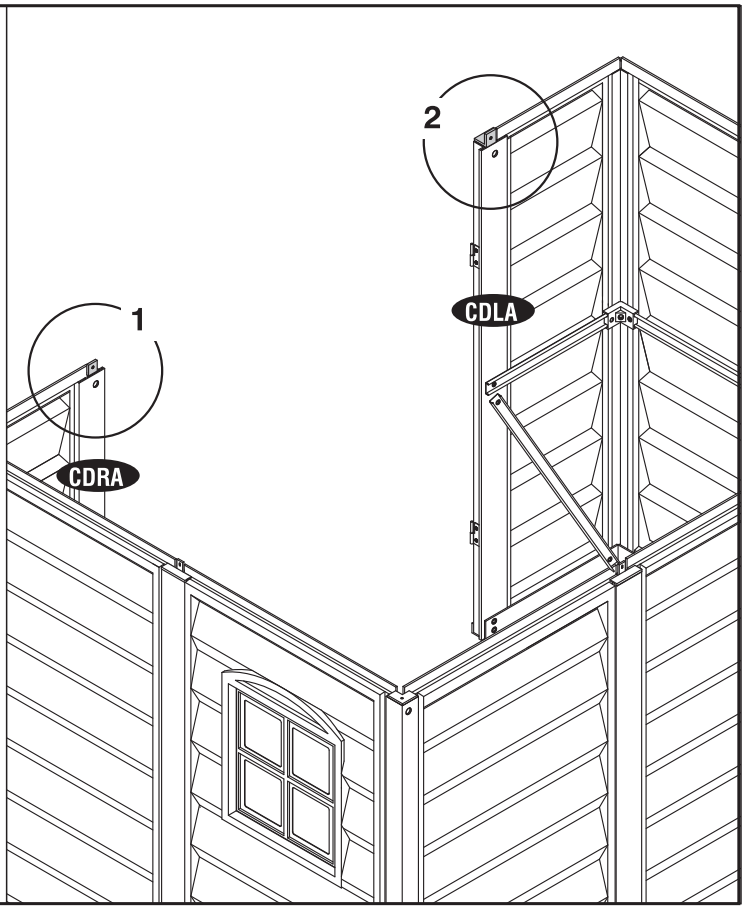

Roof Structures Assembly

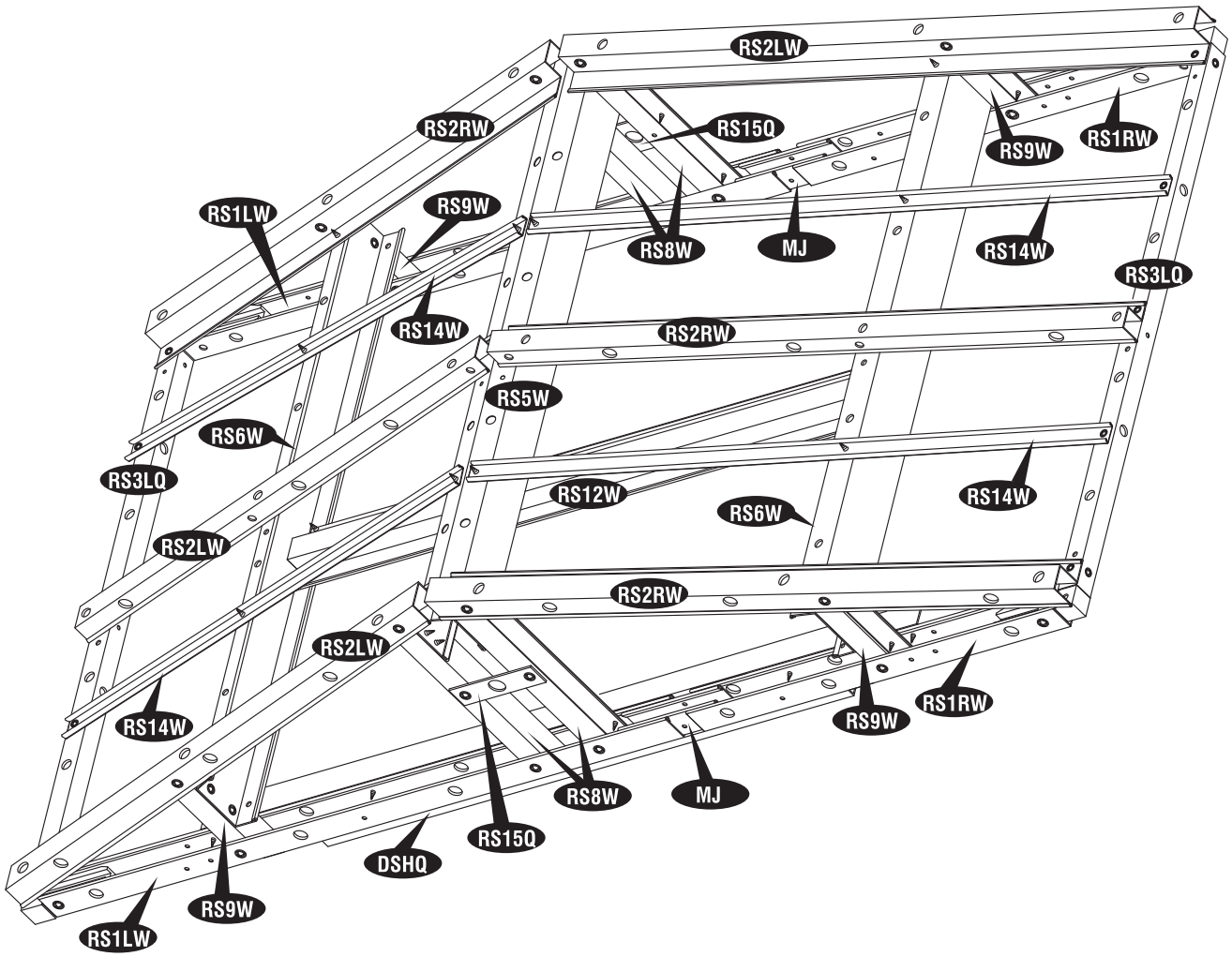

Front roof structure assembly

4

5

6

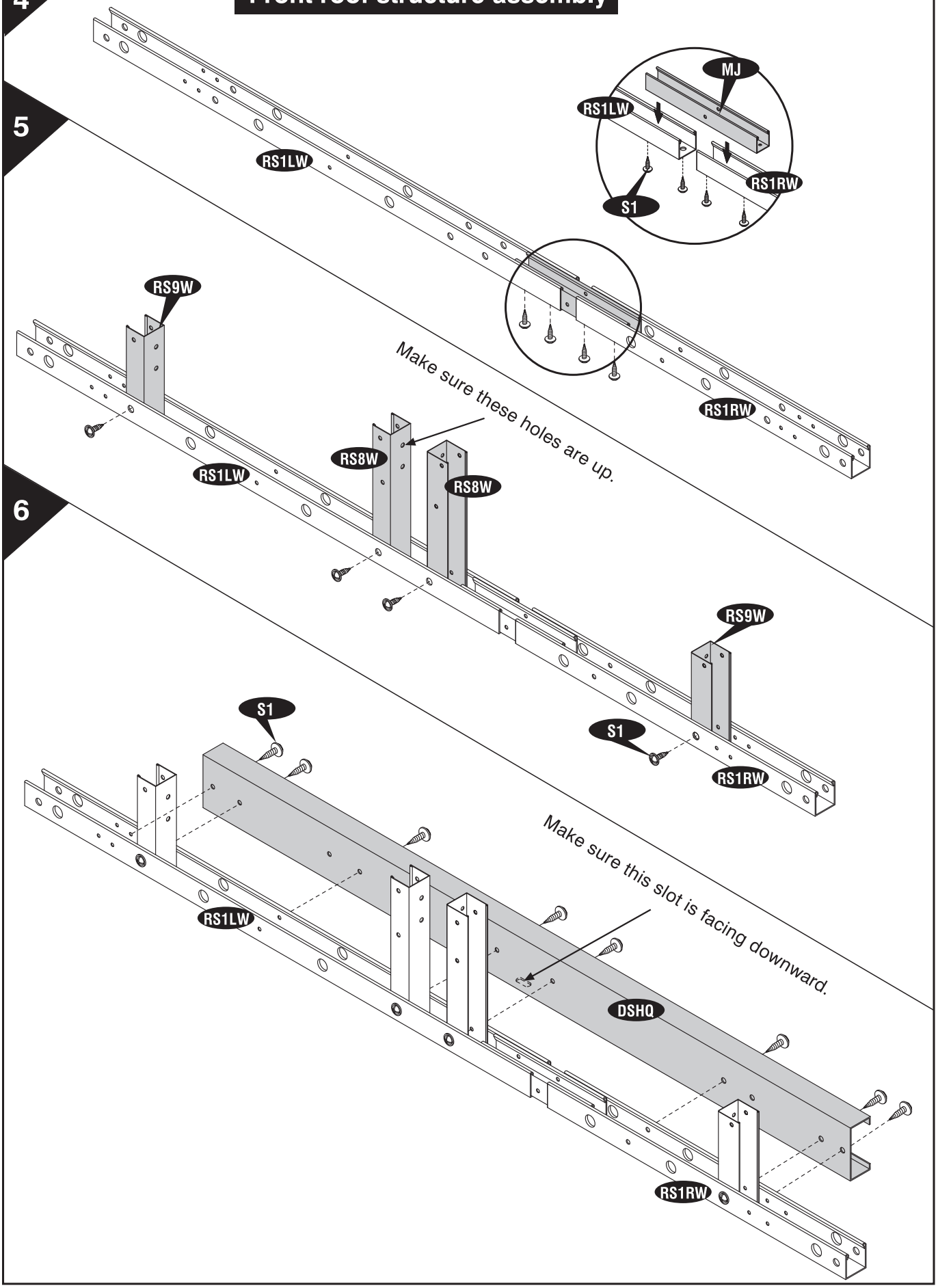

7 Back roof structure assembly

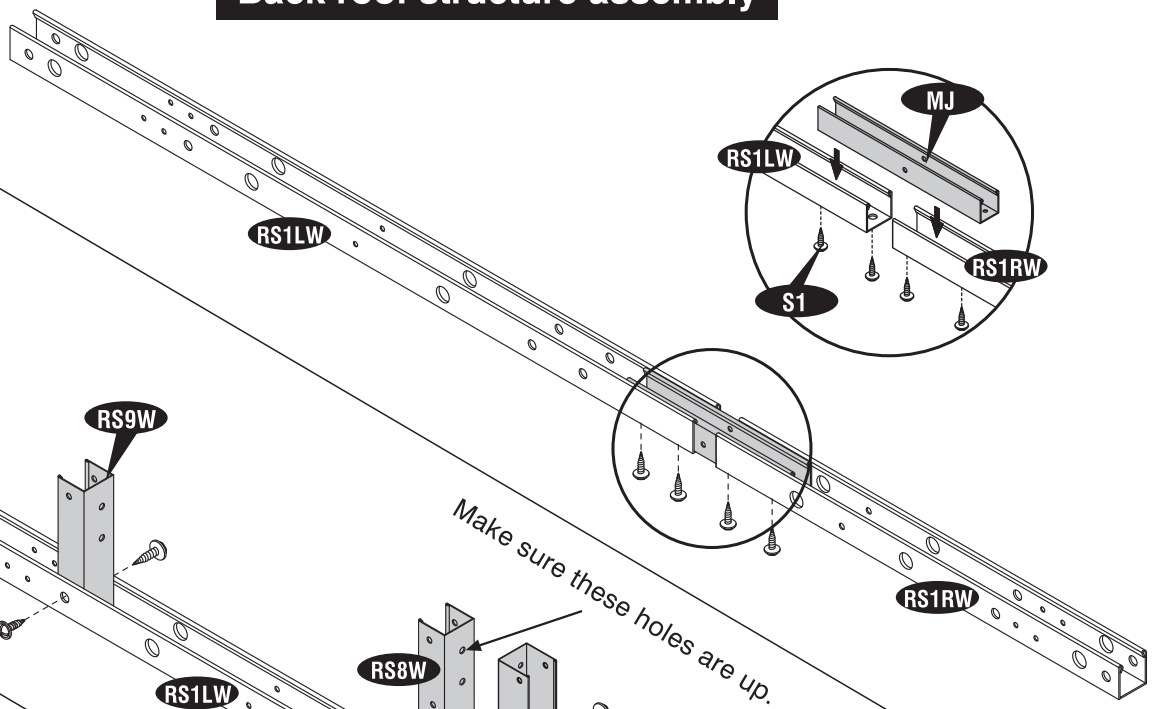

8

Make sure these holes are up.

9

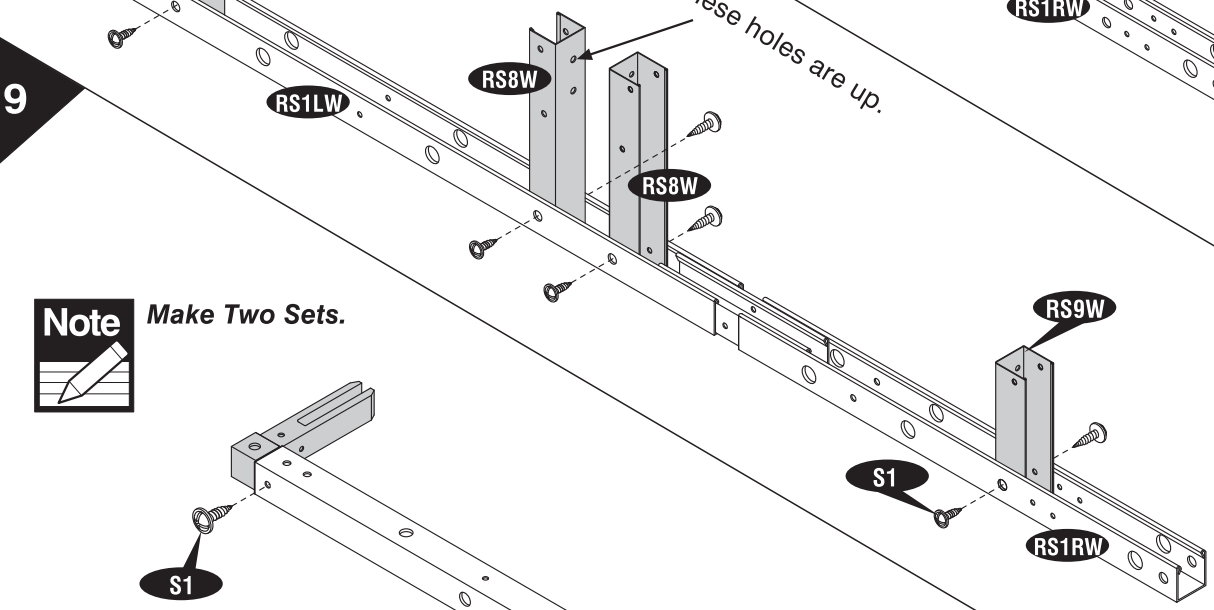

Note *Make Two Sets.*

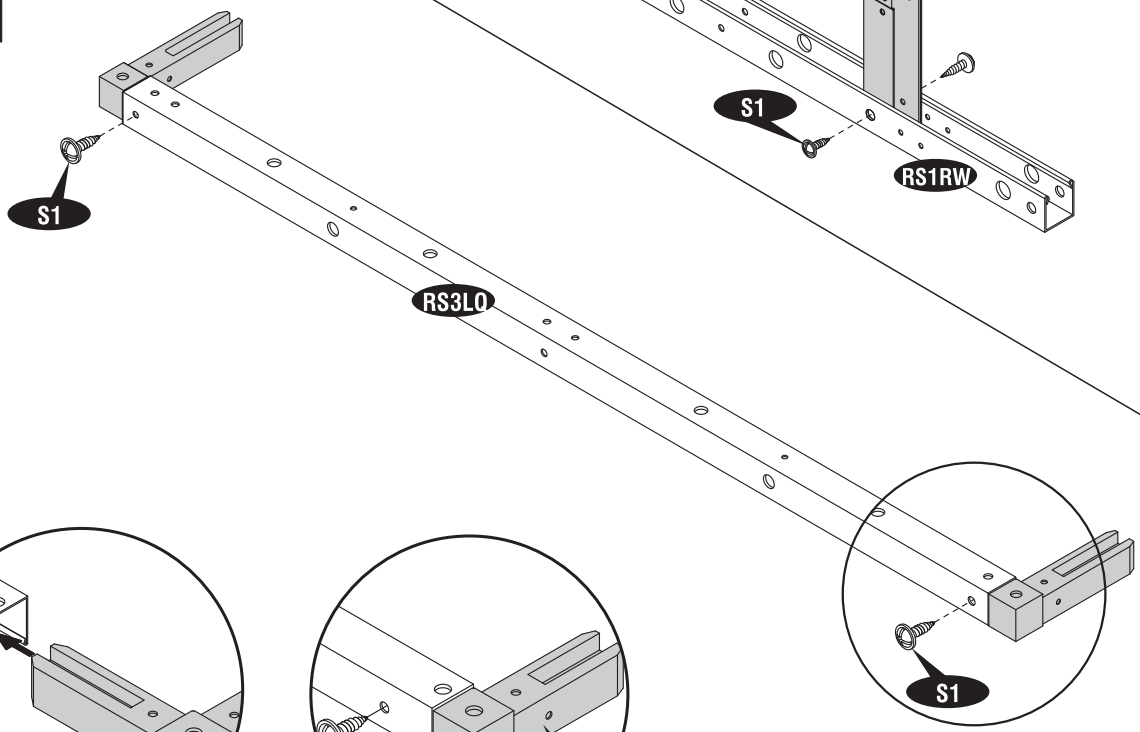

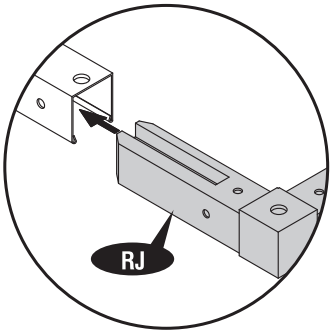

Fig.1

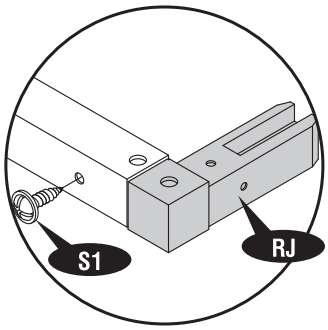

Fig.2

10

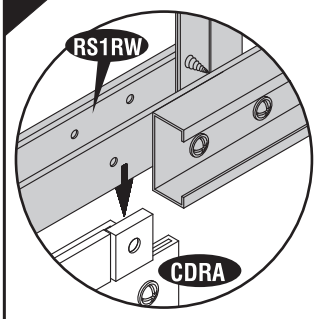

Fig.1

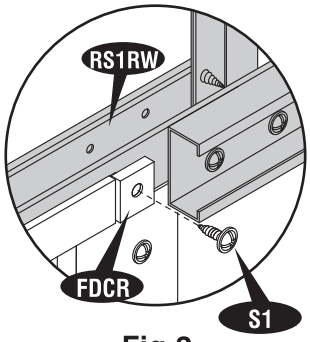

Fig.2

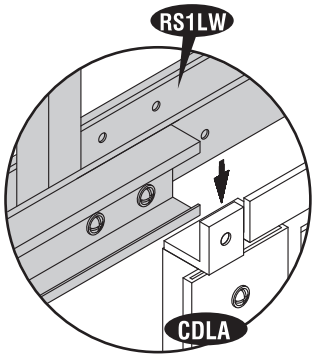

Fig.3

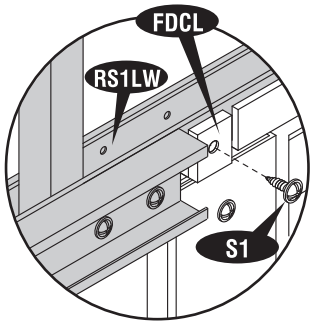

Fig.4

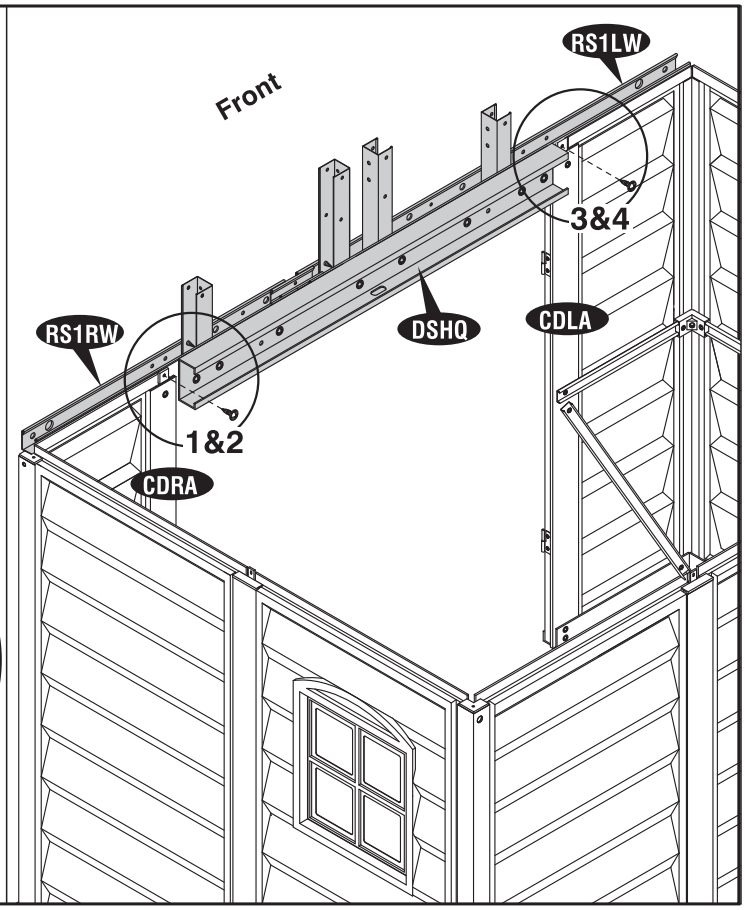

11

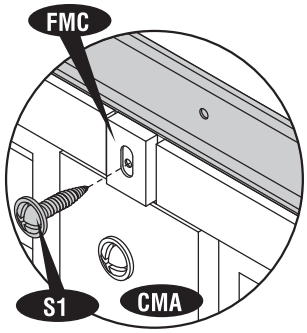

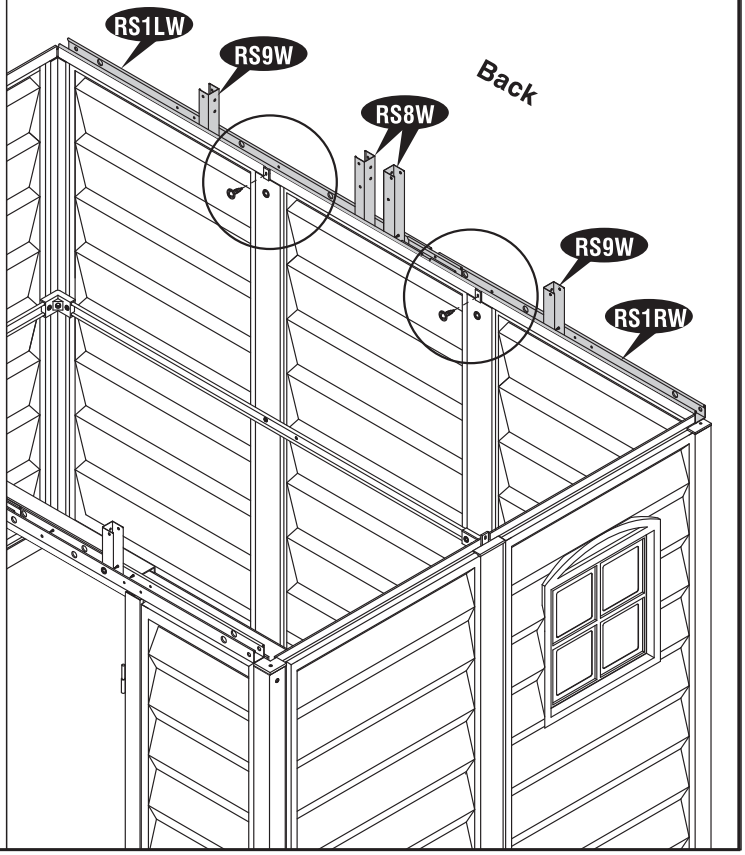

12

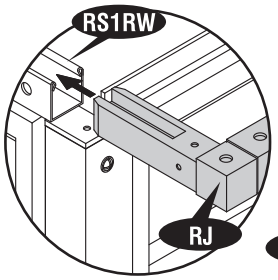

Fig.1

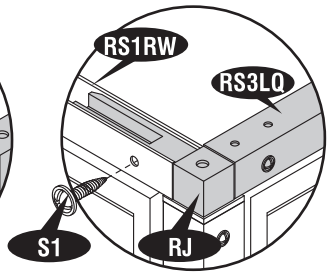

Fig.2

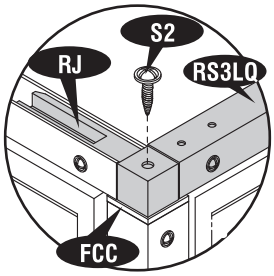

Fig.3

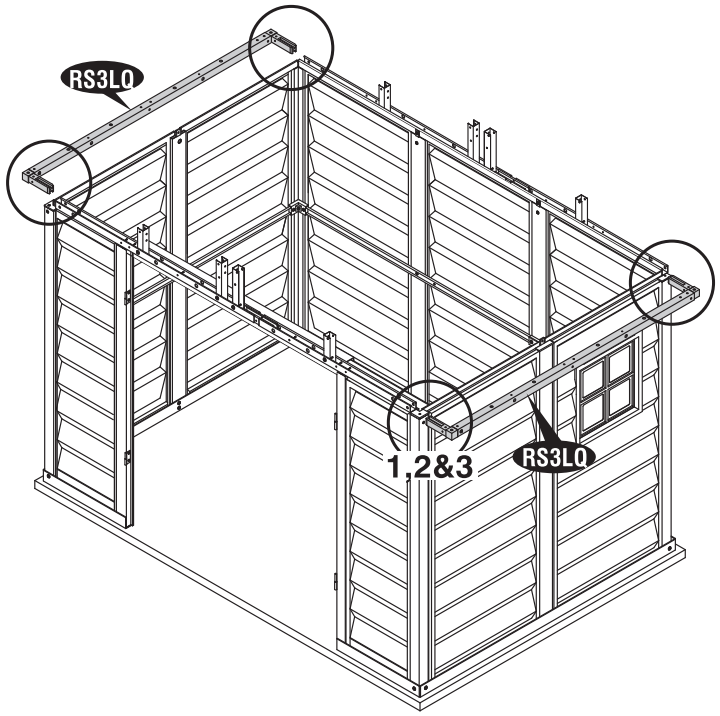

13

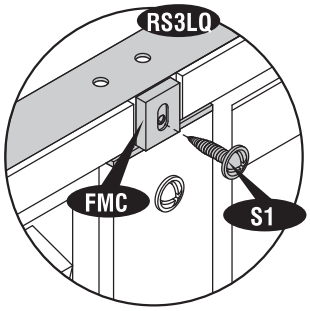

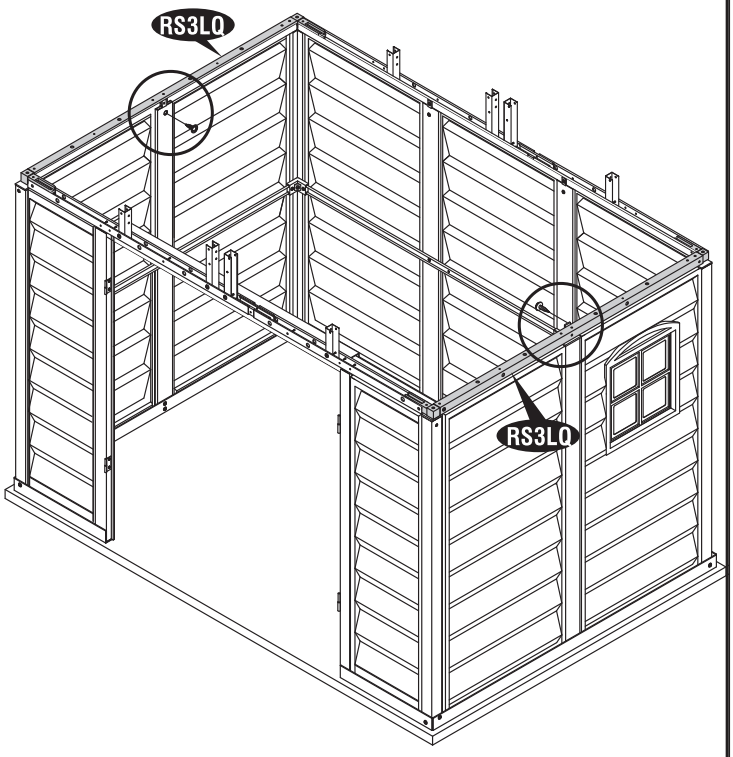

14

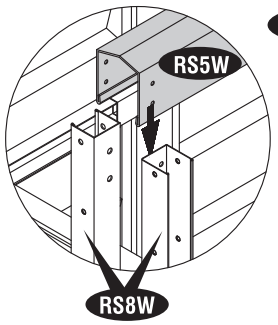

Fig.1

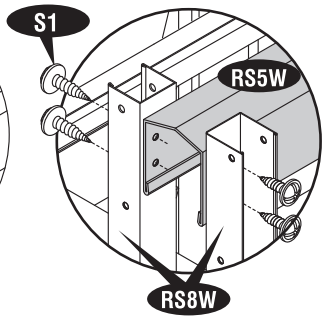

Fig.2

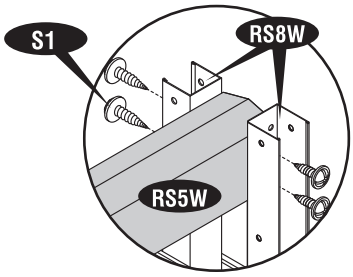

Fig.3

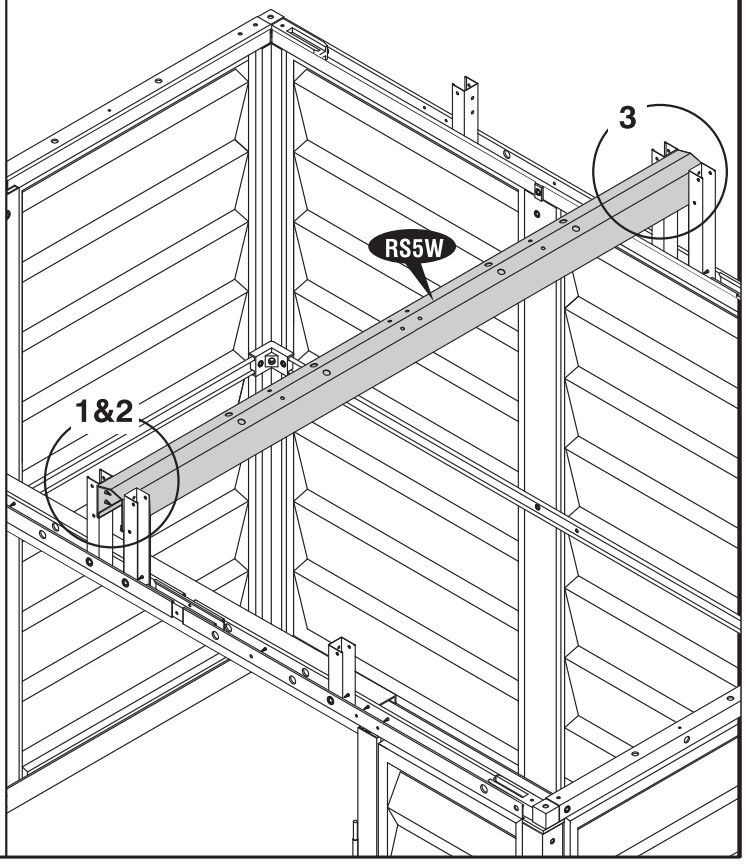

15

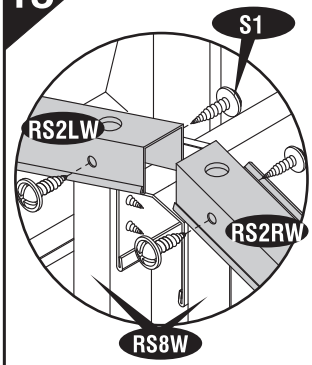

Fig.1

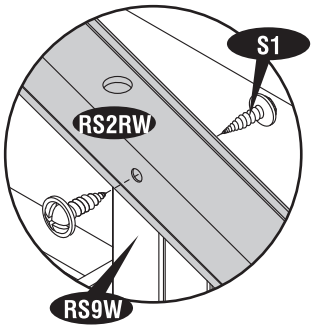

Fig.2

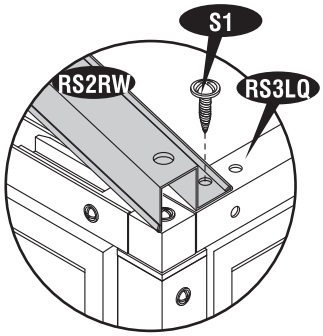

Fig.3

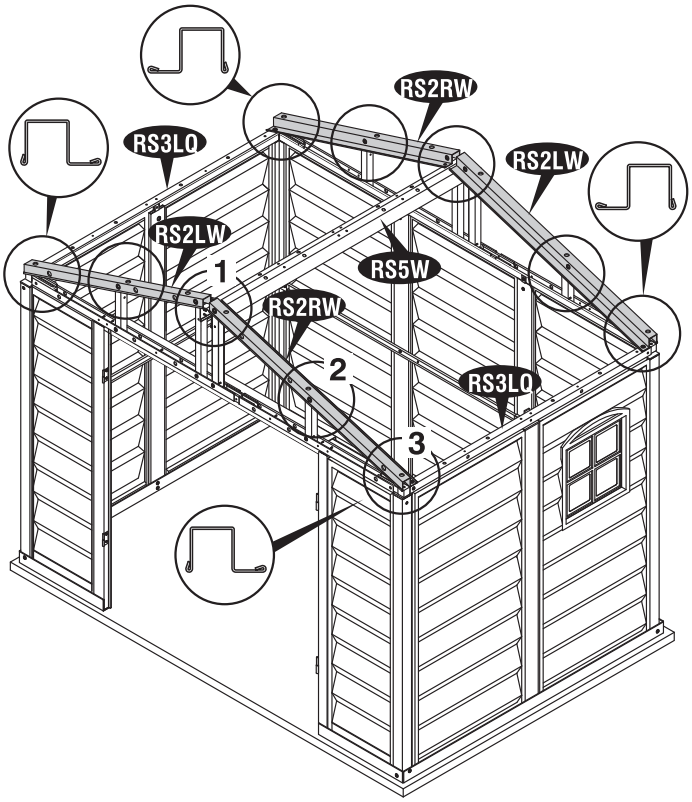

16

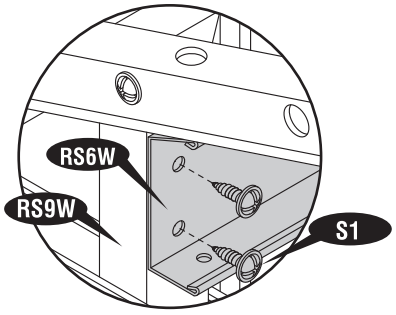

Fig.1

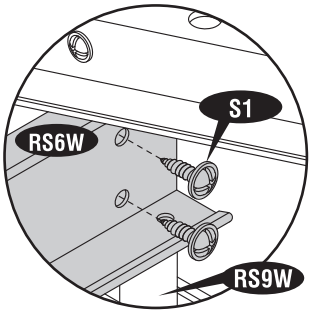

Fig.2

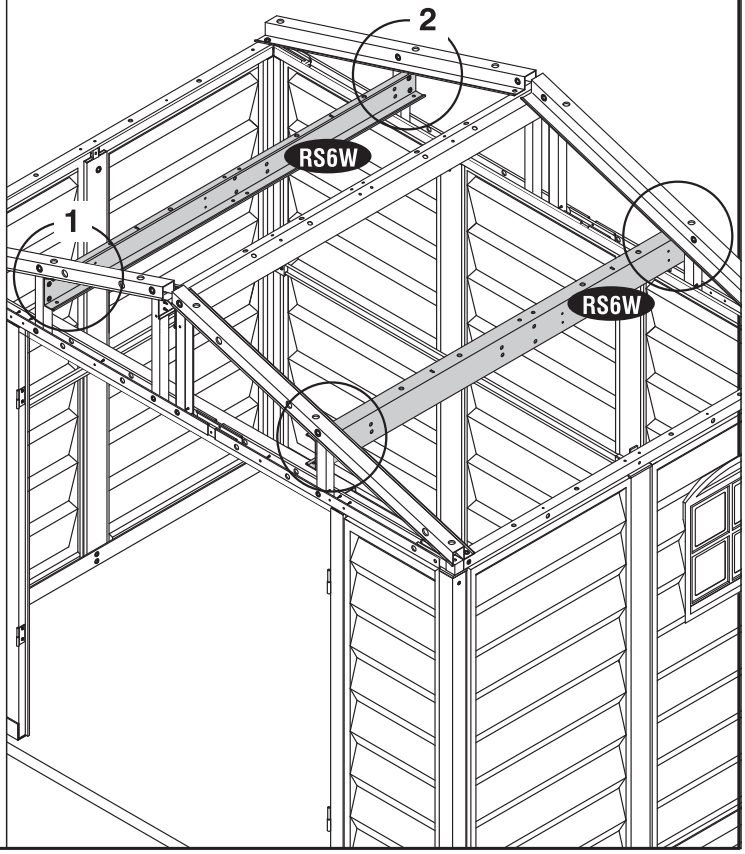

17

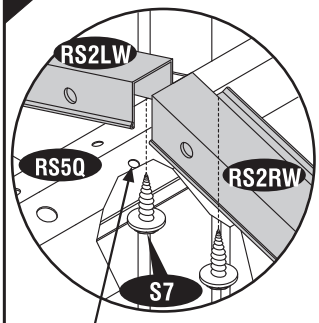

Fig.1

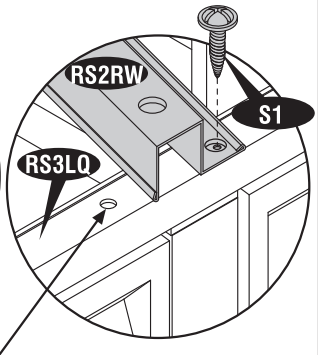

Fig.2

Do not fix this hole

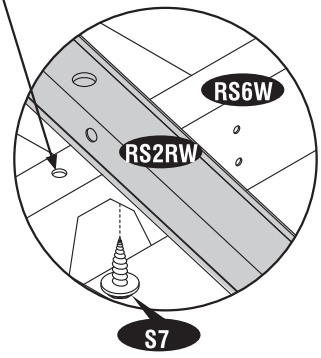

Fig.3

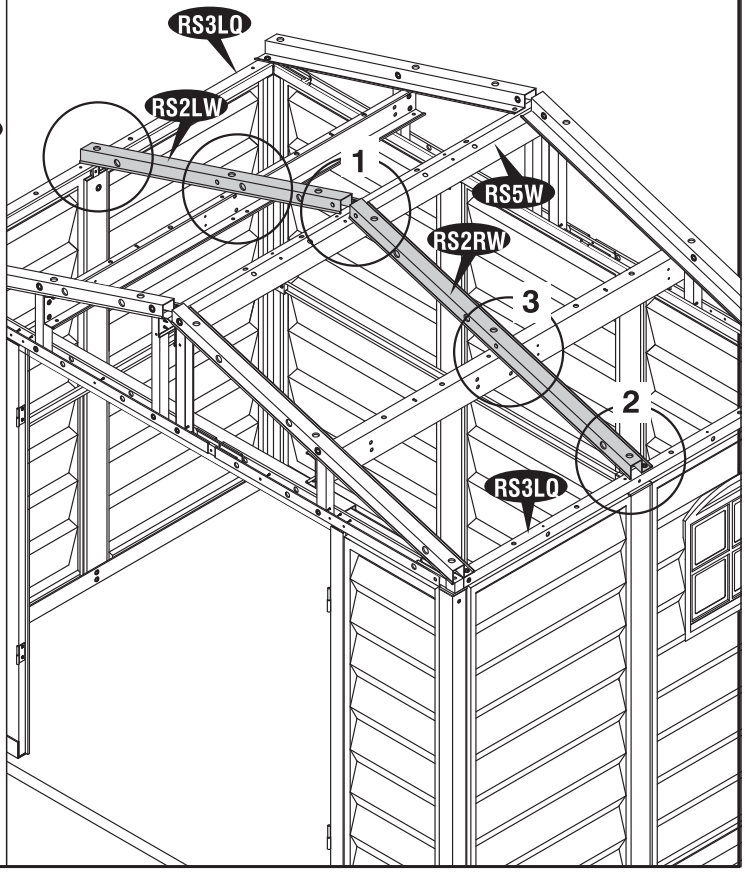

18

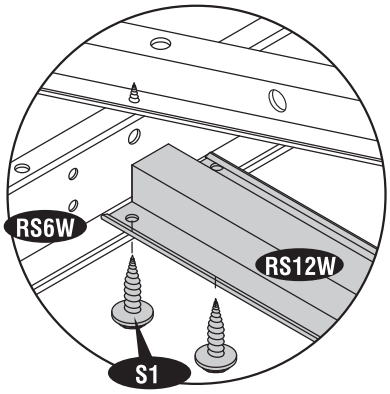

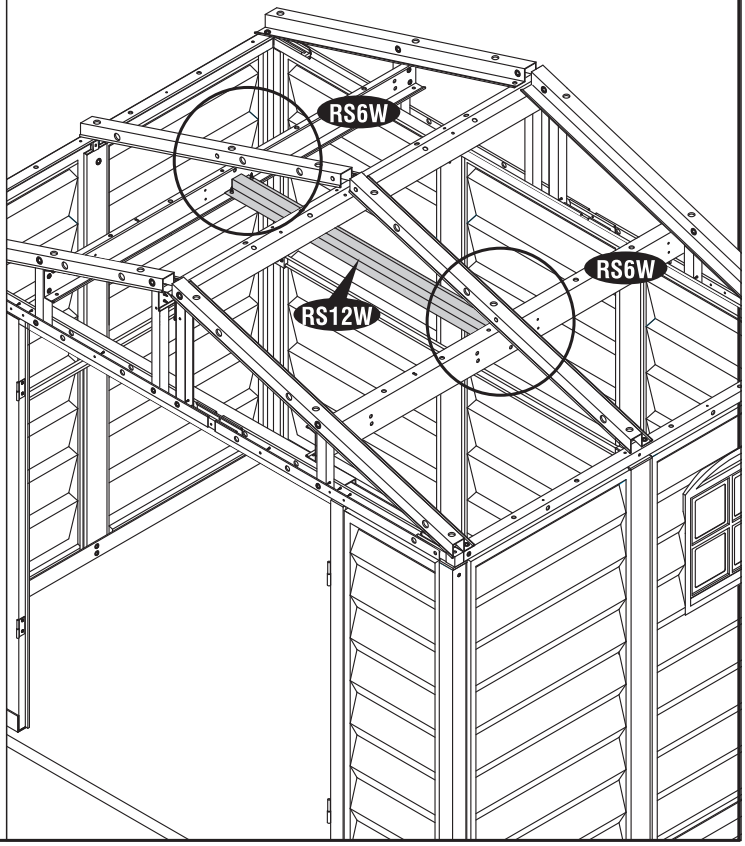

19

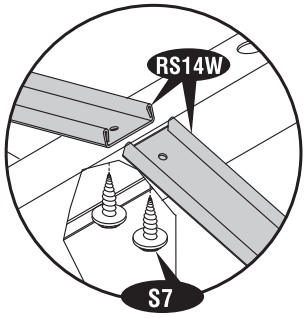

Fig.1

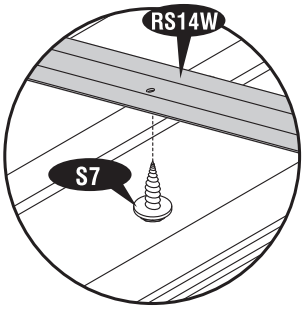

Fig.2

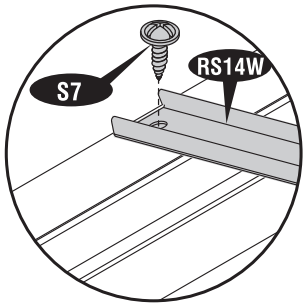

Fig.3

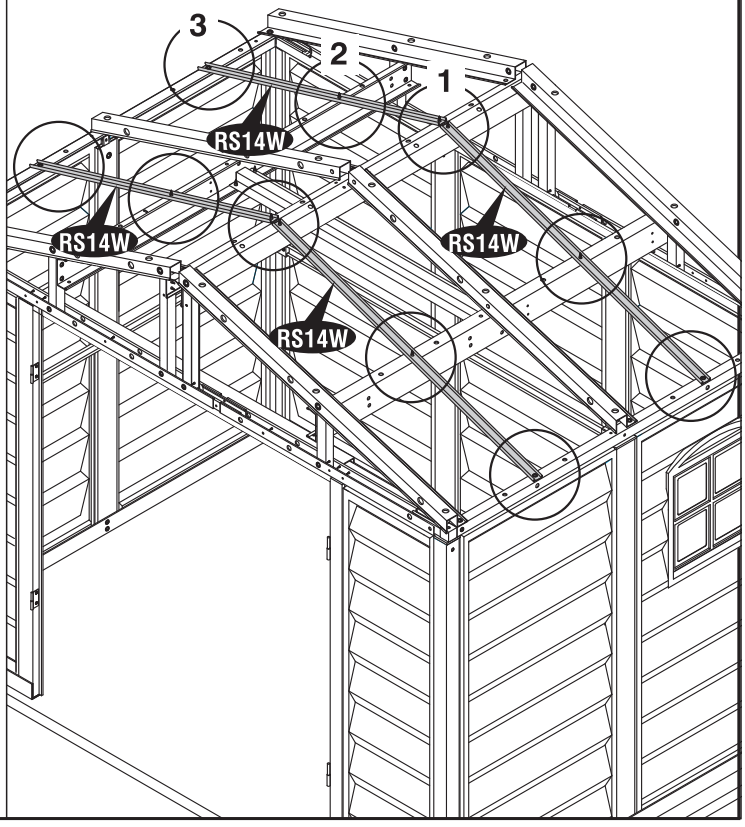

20

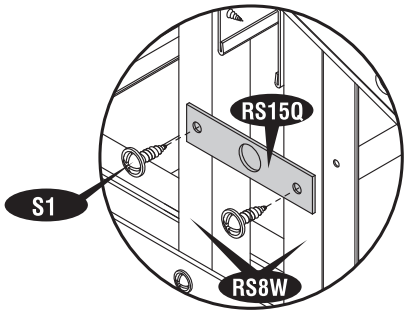

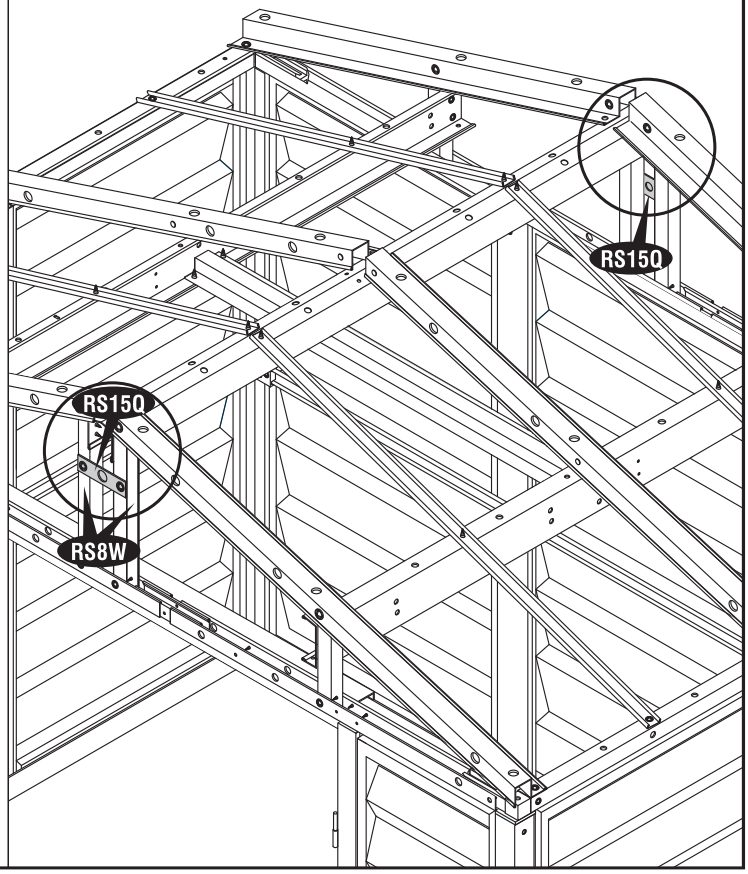

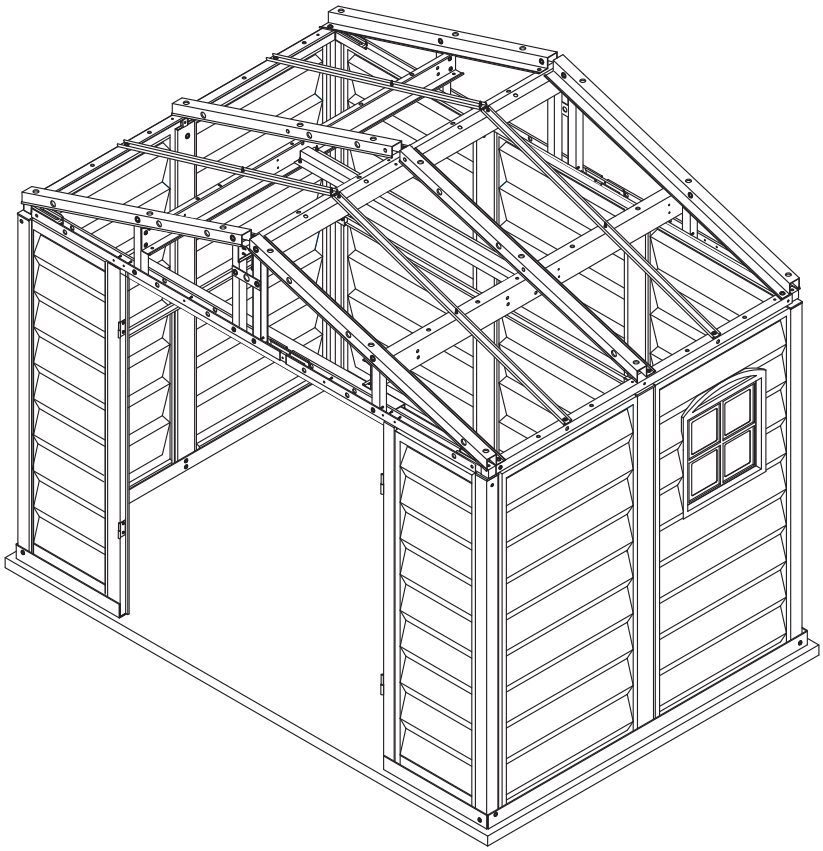

E. Roof Panels

Parts Needed:

Code	Qty	Code	Qty
R1LW↑	1	PPG	65
R3LW↑	1	PIN	65
R1RW↑	1	PPGL	1
R3RW↑	1	PINL	1
FPLB1	2	EC	2
FPRB1	2		

Note *Insert roof plugs into Facia Panel only as indicated. Use the same colour Plugs & Pins (PPG & PIN) to fix the Roof Panels & Facia Panels.*

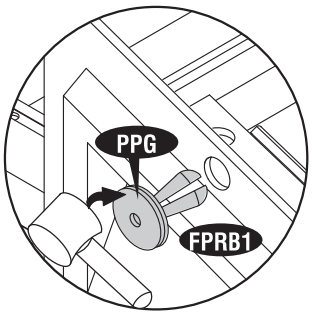

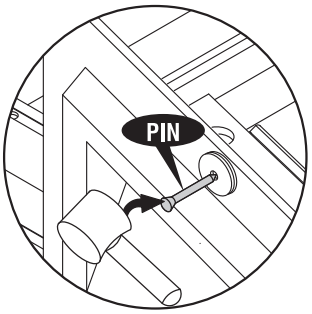

Note *Facia panel with ventilation cover (FPLB1 & FPRB1) can be fixed in the front or back of the shed.*

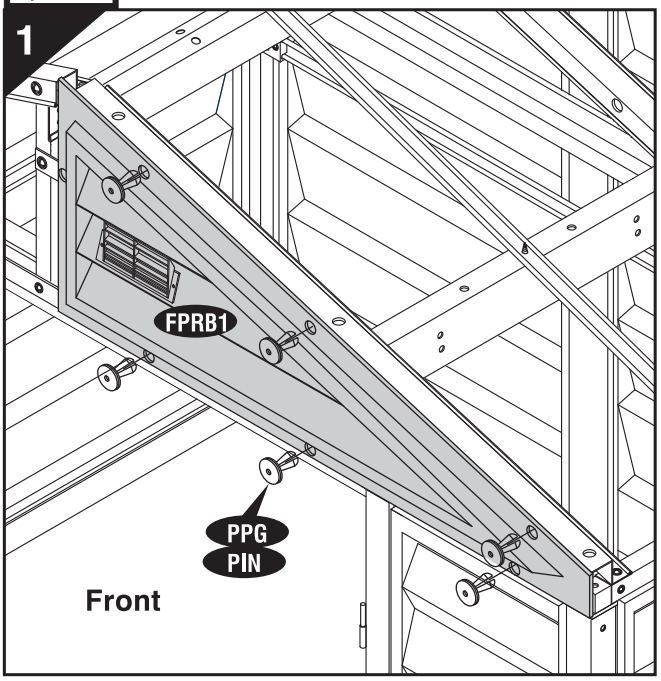

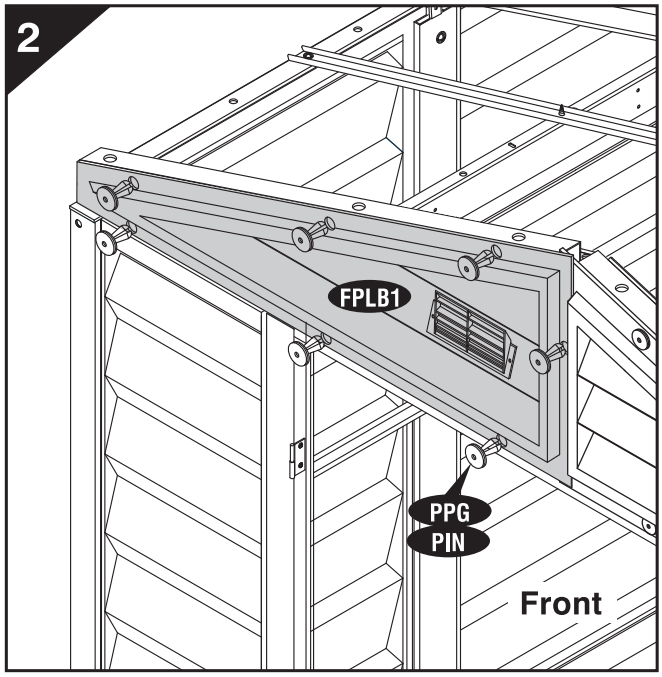

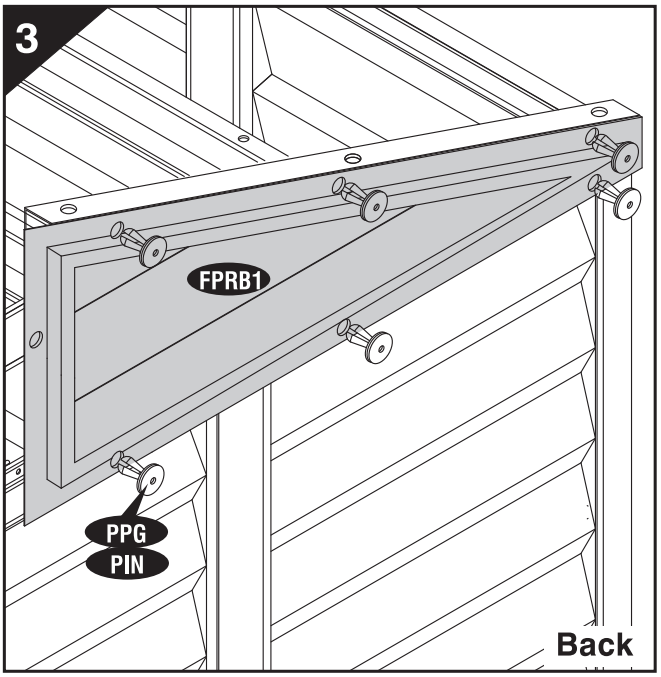

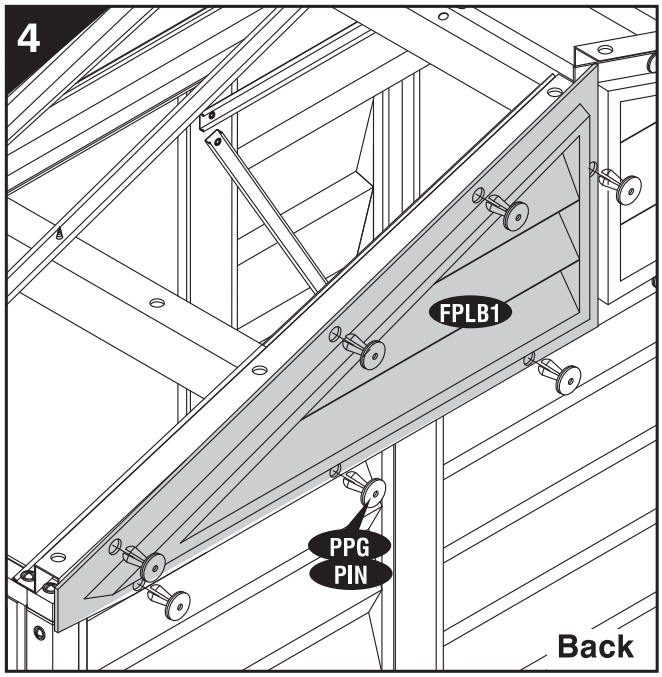

Note

Use a screw driver to align the holes.

Insert roof plugs into roof panels only as indicated.

Note

Apply silicone around the roof plugs. This is optional and should be done for heavy rain areas if needed.

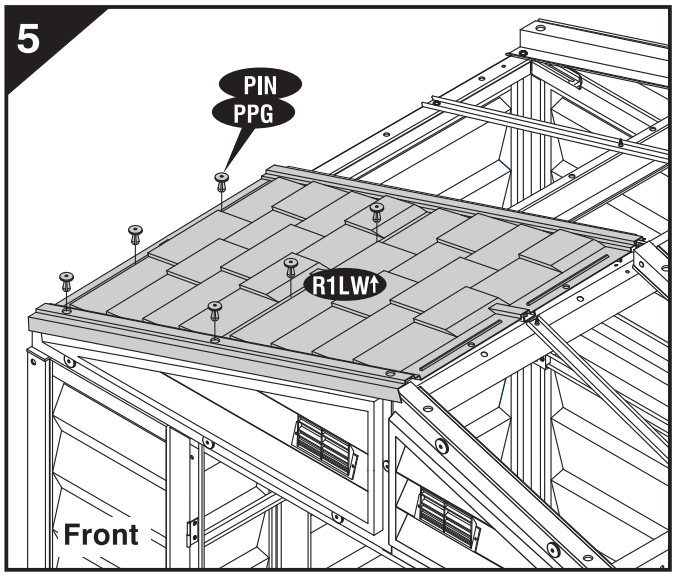

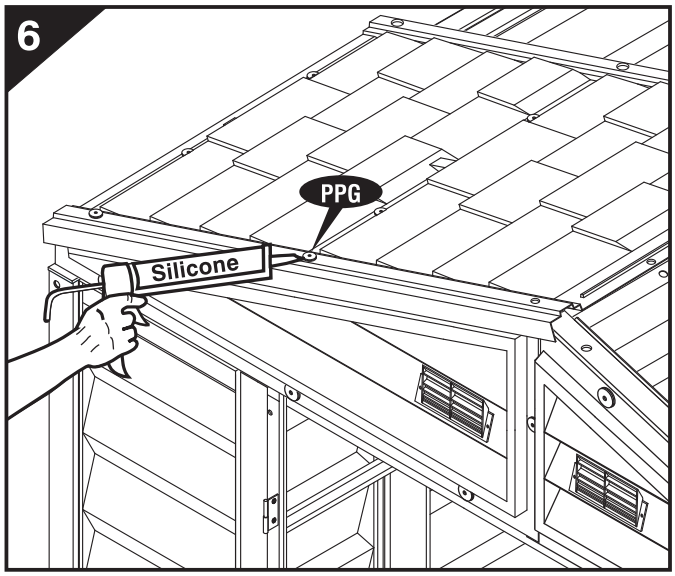

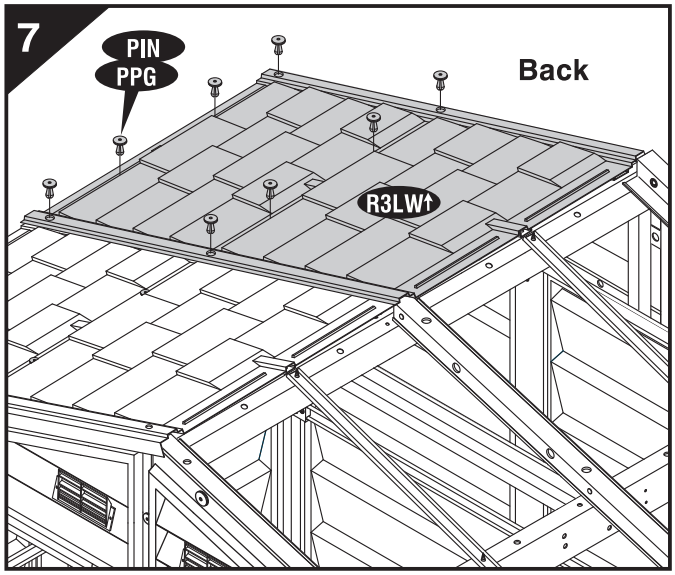

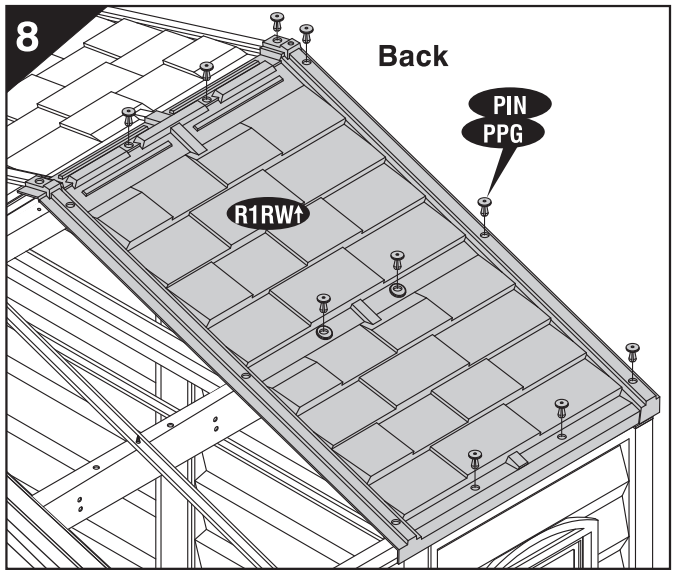

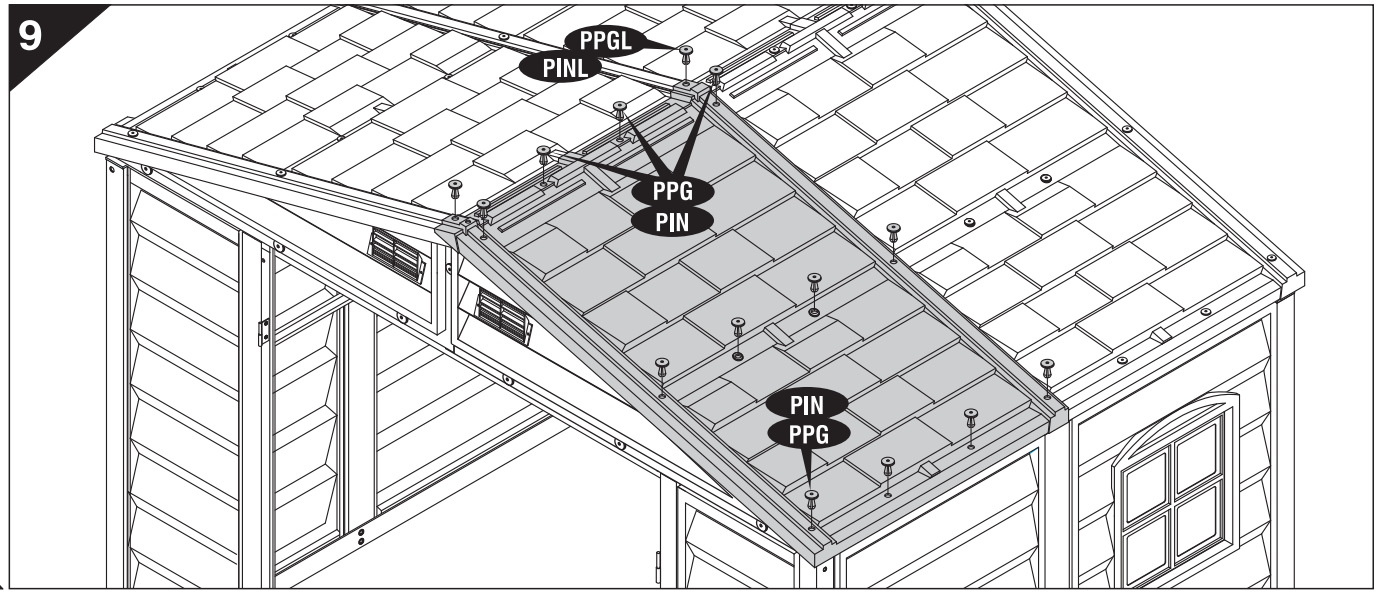

10

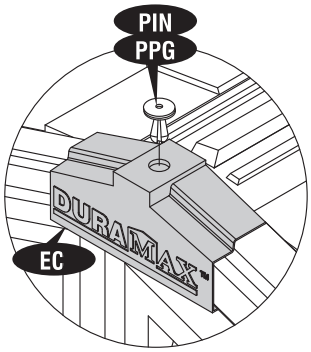

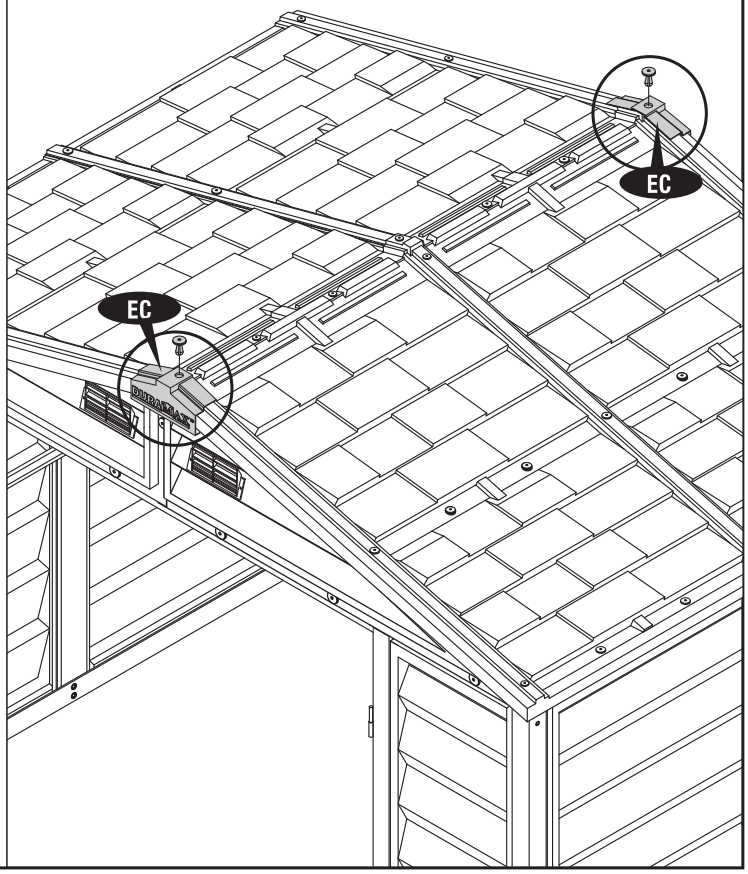

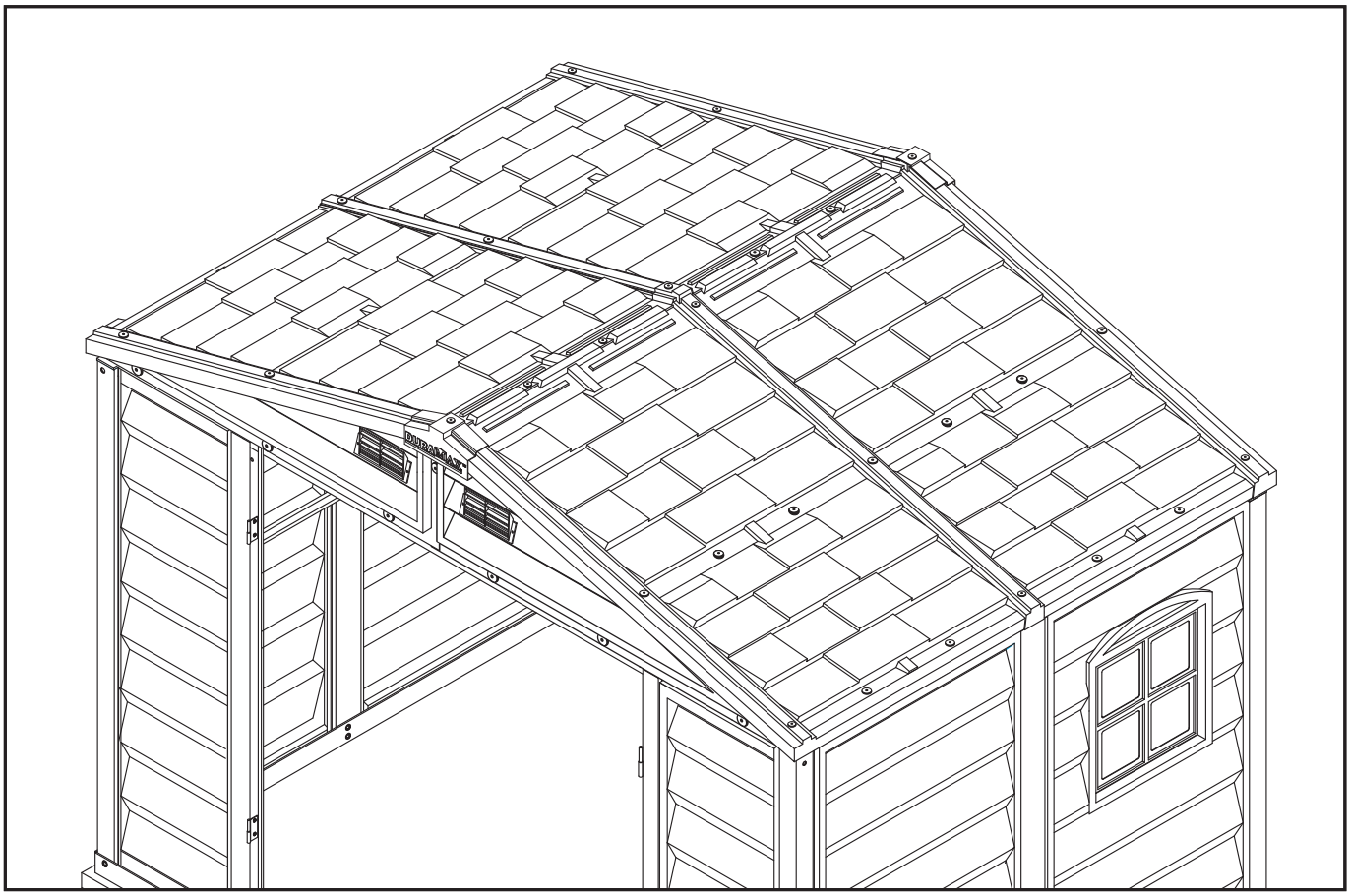

F. Door

1

Parts Needed:

Code	Qty
DL	1
DR	1
L	1
R	1
S2	4

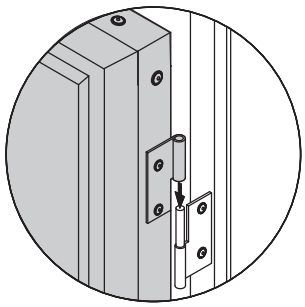

Fig.1

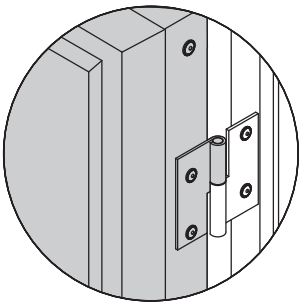

Fig.2

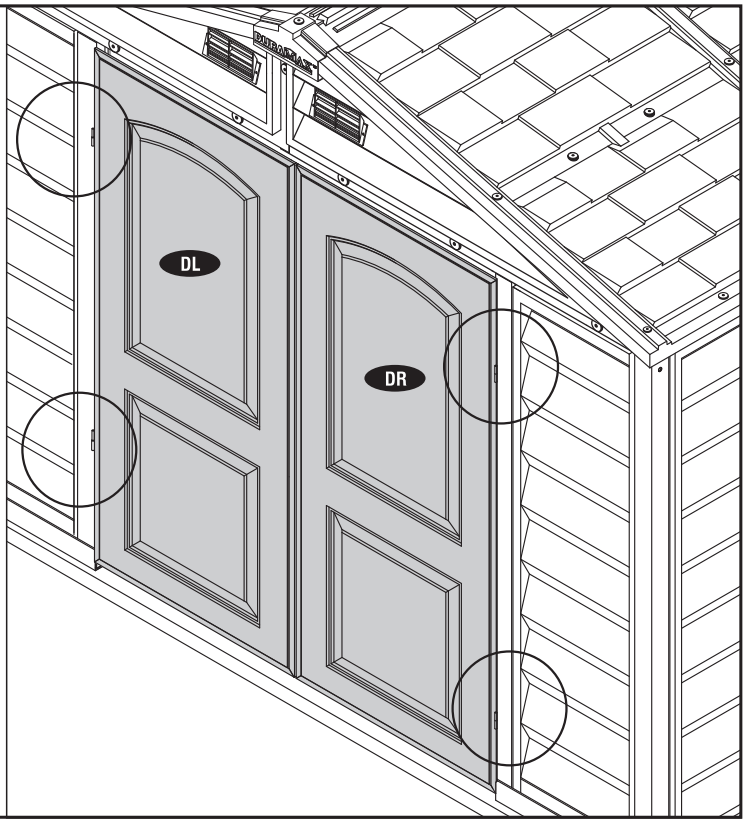

2

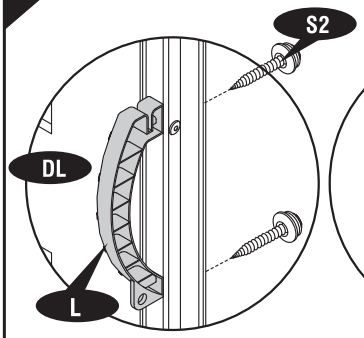

Fig.1

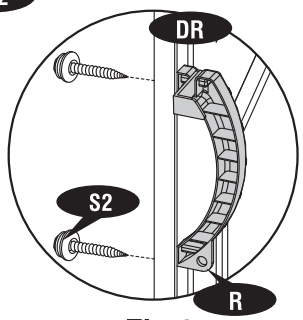

Fig.2

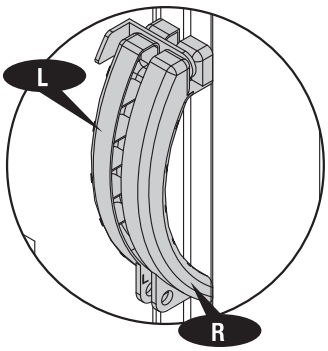

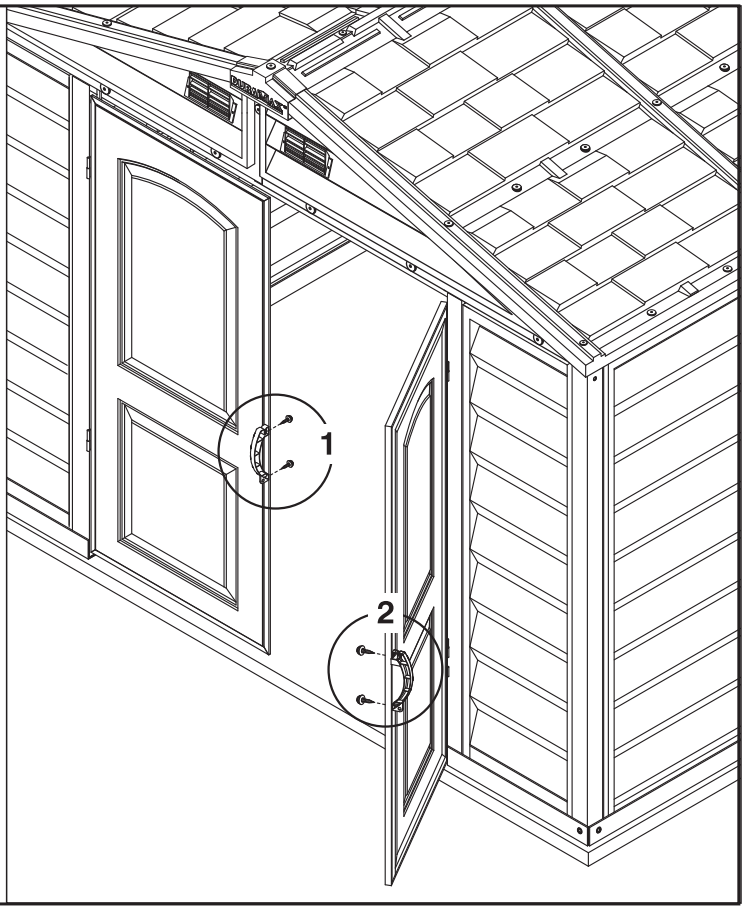

Note

Apply silicone around the perimeter of the base 'U' channel. Seal the corners, joints and base of door column. This is optional and should be done for heavy rain areas if needed.

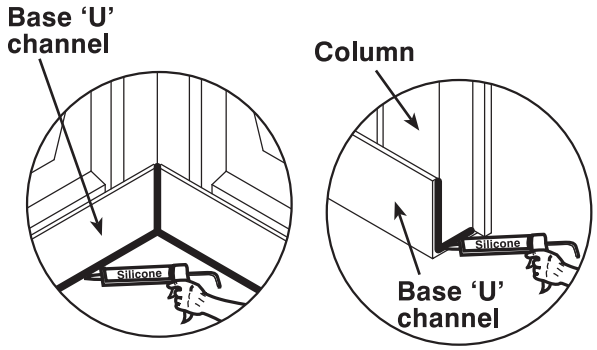

Fig.1

Fig.2

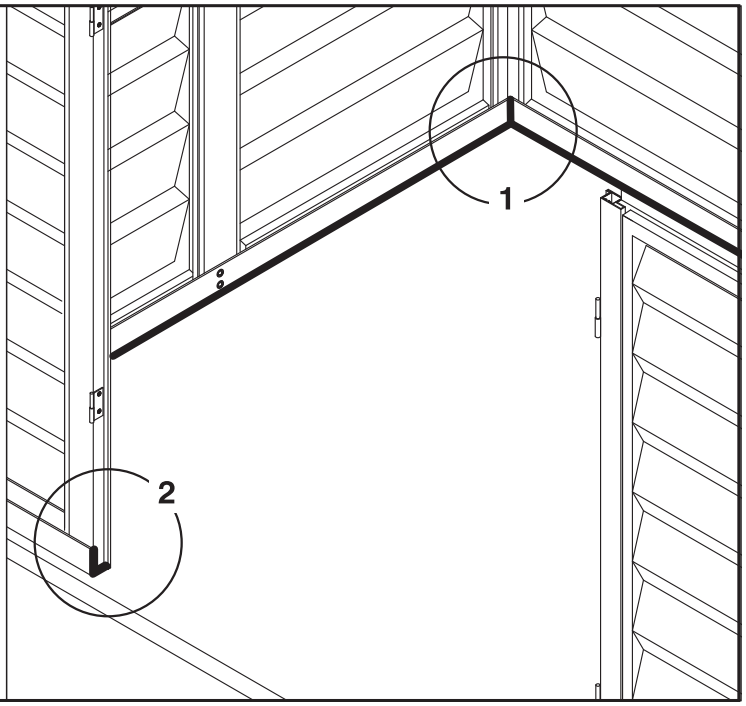

Note

Apply silicon on the perimeter of transparent sheet from inside. This is optional and should be done for heavy rain area if needed.

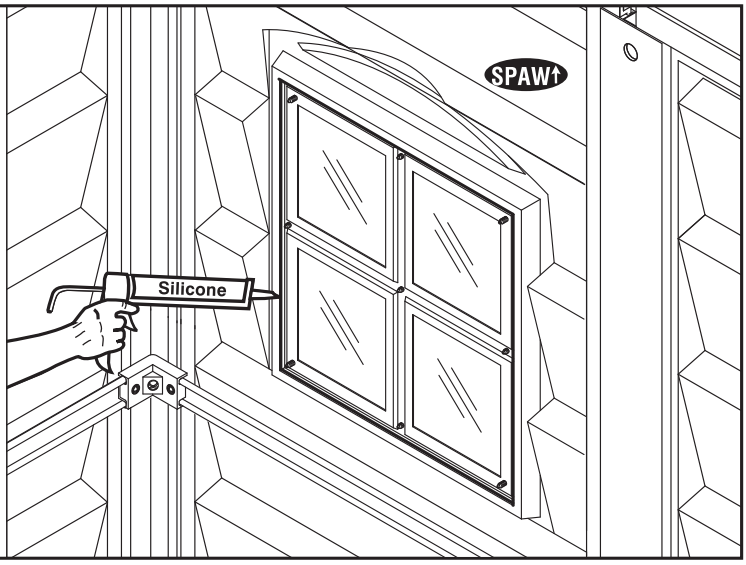

Note

For heavy rain areas, you can fix a weather strip at the bottom of the door. This is optional and the part in not included.

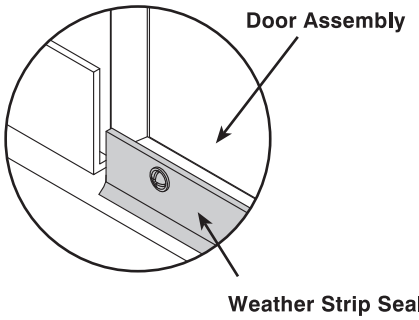

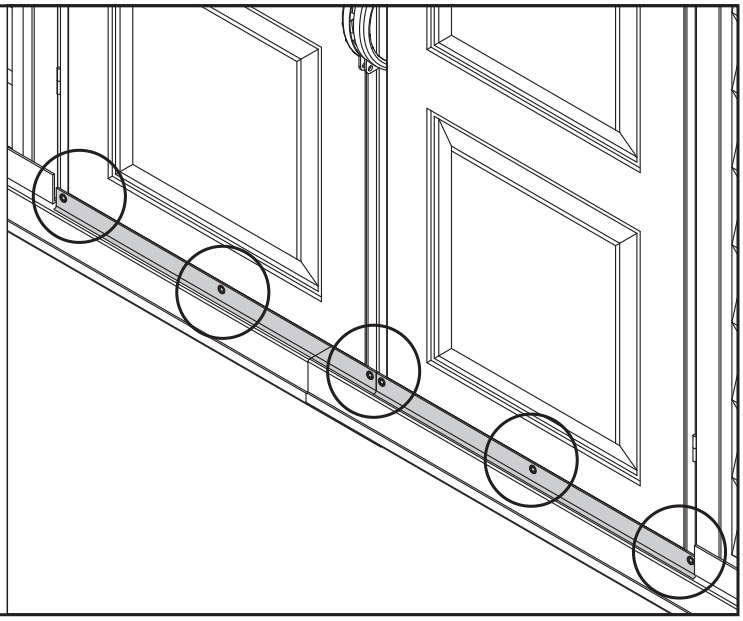

High wind area installation instructions

Note: To ensure that your shed withstands high winds, you will need the following reinforcement.

Parts needed (not included) **:**

CODE	DESCRIPTION	QTY
S4	Dia. 4.2 x 16mm. (5/32" x 5/8") Sheet Metal Screw	38
S5	M6 x 40mm. (1/4" x 1 1/2") Anchor Bolt	22

1

Using a carpenter square, line up corners.

Align base bars, mark the concrete at the holes in the base and drill concrete with suitable concrete bit to accept 1/4" x 1 1/2" (M6 x 40mm) anchor bolts.

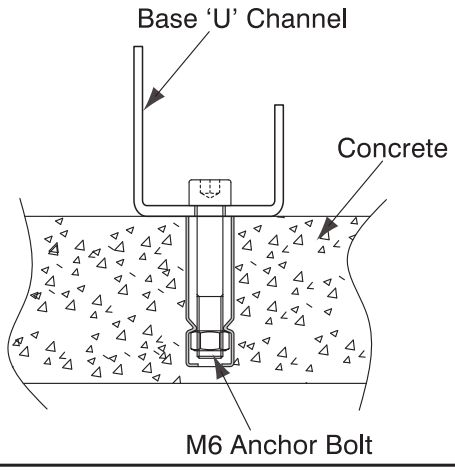

2

Attach each side panel **(SP↑)** on the bottom to the Base U-channel. Using a dia. 3mm (1/8") drill with a power drill, make two equal distance holes on the Base U-channel through the Side Panel. Drive a self tapping screw **(S4)** through the Base U-channel to the Side Panel.
Repeat this for every Side Panel. See blowup.

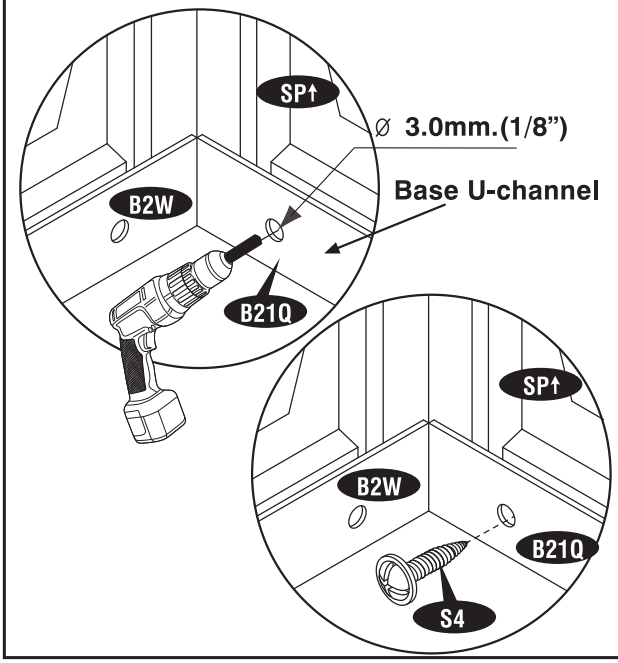

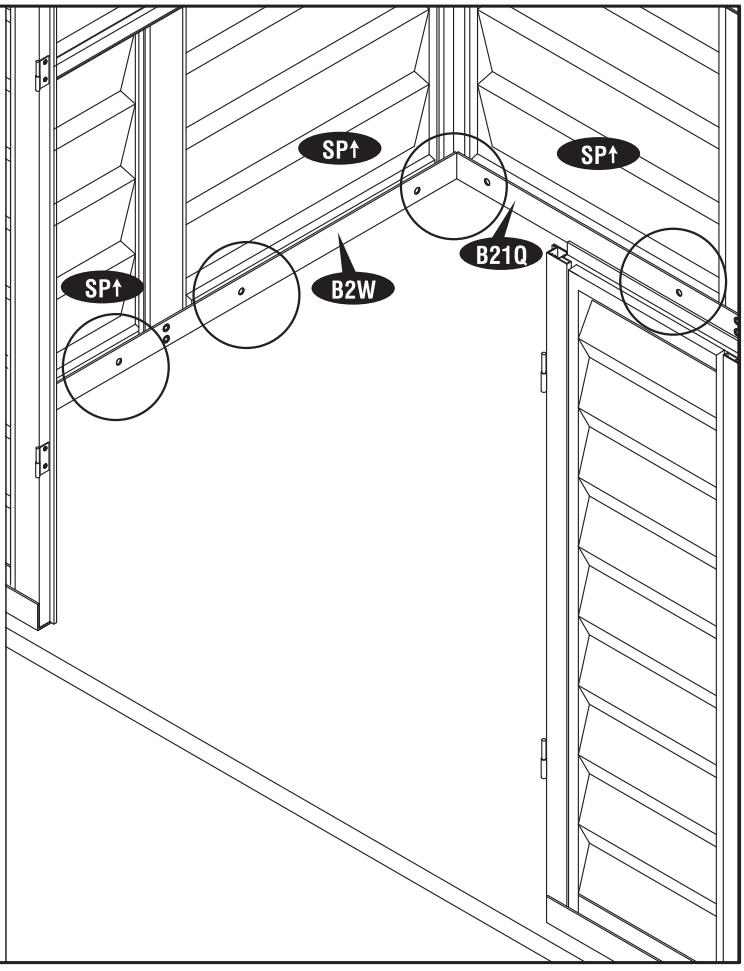

3

Attach each Side Panel **(SP↑)** on top to the Roof Structure **(RS1LW, RS1RW, RS3LQ).** Using a dia. 3mm (1/8") drill with a power drill, make two equal distance holes on the Side Panel through the Roof Structure. Drive a self tapping screw **(S4)** through the Side Panel to the Roof Structure.
Repeat this for every Side Panel. See blowup.

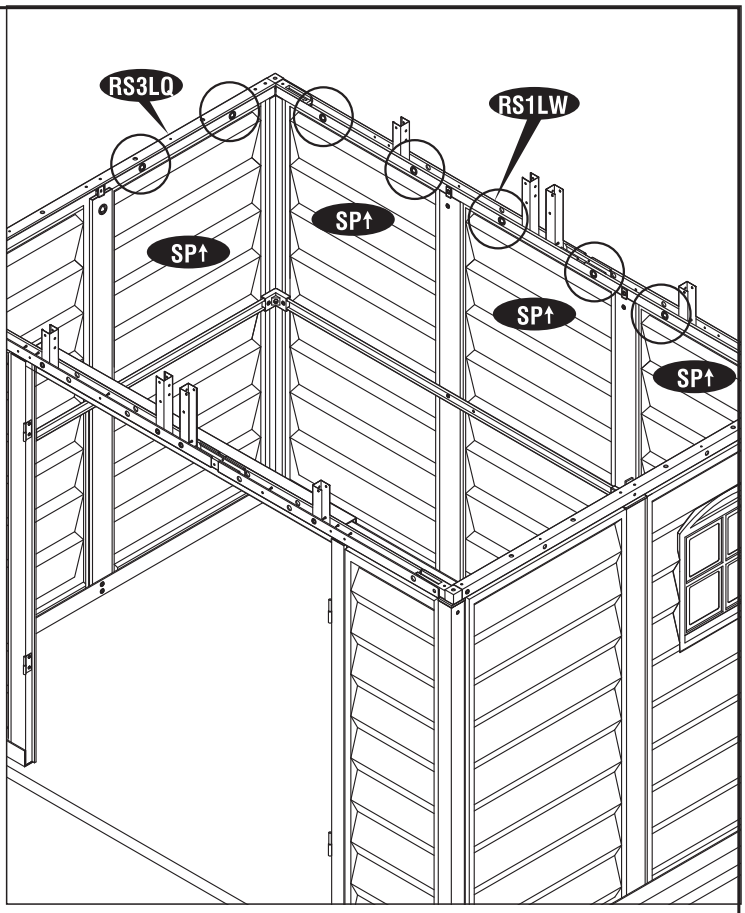

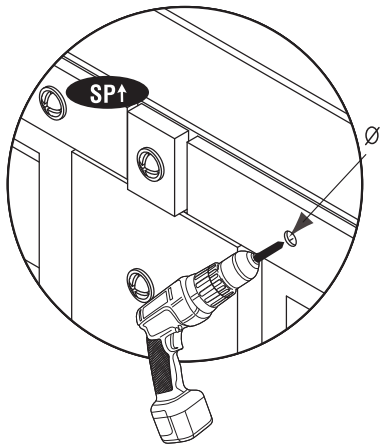

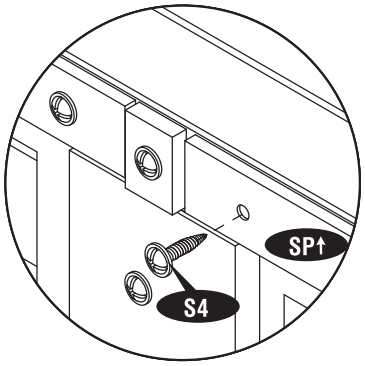

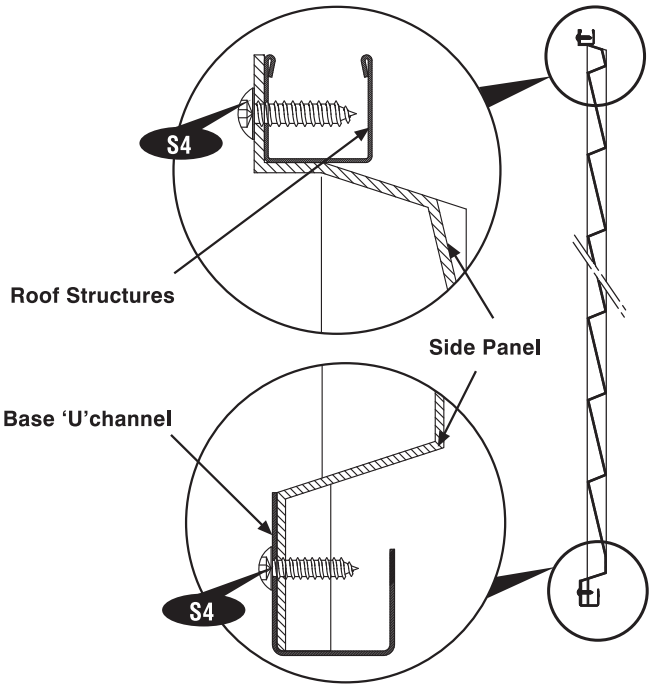

Important Warranty Information

The 'DURAMAX' shed has been tested and passed wind loads of up to 115 mph in a controlled laboratory environment. Natural high wind areas create wind at unpredictable speeds that are very difficult to capture accurately by location. As such we cannot guarantee the performance of the shed in these extreme situations.

"We recommend to clear snow from the Roof top after each Snowfall."

ADDITIONAL ACCESSORIES AVAILABLE

These accessories are required in case of heavy snow or high wind areas. Please choose relevant accessories according to your needs.

ANCHOR KIT (Soil)

Wire rope with twist augers for sheds installed with foundation (Wood / Metal) on soil.
For heavy wind area.

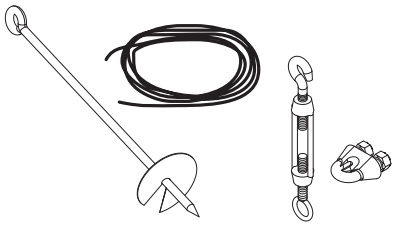

ANCHOR KIT (Concrete)

Eye bolt with wire rope for sheds installed with foundation (Wood / Metal) on concrete.
For heavy wind area.

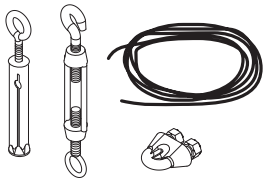

ANCHOR KIT (Foundation)

Strap clamping for shed assembly with foundation (Wood / Metal) on concrete.
To prevent shed from displacement.

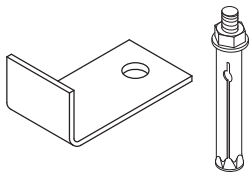

SHELF KIT

Easy mounting system on the middle column.
6 inch wide reinforced PVC shelf with end caps.

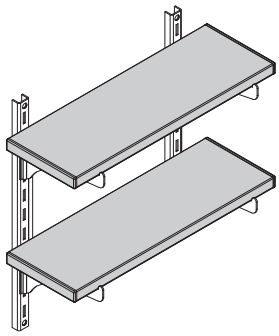

U.S. Polymers, Inc.
1057 S. Vail Ave
Montebello, CA 90640,
United States of America