DURAMAX™ ALL PURPOSE VINYL GARDEN SHEDS — A Product of USP US POLYMERS INC

Vinyl Garden Shed

OWNER'S MANUAL /

Instructions for Assembly '10 Ft WoodBridge Extension'

Size 10 Ft x 2 1/2 Ft /3.2 m x 0.8 m (Approx.)

Ver: 4.0

Patent #416.091

ISO 9001:2008

• BAUART GEPRÜFT • TYPE APPROVED

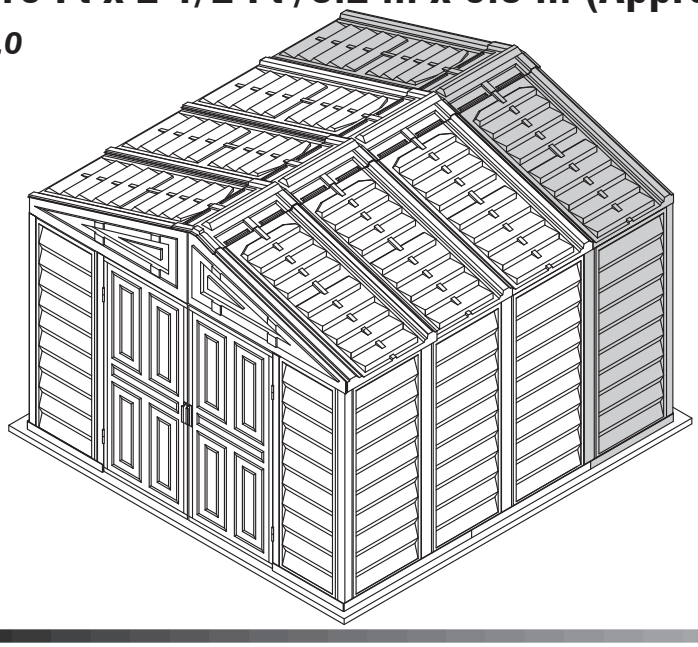

Customer Service Hotline

(800) 483-4674

www.duramaxbp.com

Your Total Solution To Maintenance Free Storage Sheds.

- All Weather Durable PVC
- Won't Dent, Rust, Rot or Mildew
- Tall Walk In Shed
- Never Needs Painting
- 61 Inch Wide Double Doors
- Easy Assembly
- High Wind Tested
- Snow Load Tested 20lbs/sq. foot
- Pad Lock Ready (Lock not included)
- Wooden or Cement Foundation Needed

Available Kits

- Foundation Kit Available
- Modular 2.5 Ft Extension Kits Available
- 10 Ft x 8 Ft Window Kits Available

PART 1
ASSEMBLING SHED WITH EXTENSION KIT

PART 2
ADDING EXTENSION KIT TO EXISTING SHED

Note: For shed with extension use this manual only.

Call us for any missing or damaged parts.
Do not return to the store.

Building Dimensions (One extension) :

Approximate Size	Storage		Exterior Dimension					Interior Dimension	
	Area	Volume	Base Dimension			Roof Edge to Edge		Wall to Wall	
				inch	cm	inch	cm	inch	cm
10 Ft x 2 1/2 Ft	26 1/2 Sq. Ft	161 1/4 Cu.Ft	Width	125 3/8	318.4	127 7/8	324.8	123 3/8	313.3
3.2 m x 0.8 m	2.5 Sq.m	4.6 Cu.m	Depth	31	79	31	79	31	79
			Height			85 1/2	217.1	73	185.5

Note - Basic shed dimensions are available in basic shed manual.

Duramax Garden Shed
Limited Fifteen Year Warranty

U.S. Polymer Inc. will send a replacement part free of charge, in the event of material defects and or workmanship for a period of fifteen years from the date of purchase.

This warranty is extended only to the original purchaser. A purchase receipt or other proof of date of original purchase will be required before warranty service is rendered. In no event shall we pay the cost of flooring, labor, installation or any other costs related thereto.

This warranty only covers failures due to defects in material or workmanship which occurs during normal use and does not extend to color change arising due to normal weathering or to damage resulting from misuse or neglect, commercial use, failure to follow assembly instructions and the owner's manual (including proper anchoring of the shed), painting, forces of nature and other causes which is beyond our control.

Claims under this warranty must be made within the warranty period by calling 1-800-483-4674 or mail in a dated sales slip and clear photograph of the part to:

U.S. Polymers, Inc.
1057 S. Vail Ave,
Montebello, CA 90640.

We reserve the right to discontinue or change components. If a component has been discontinued or is not available,
U.S. Polymers, Inc. reserves the right to substitute a component of equal quality as may be compatible.

Limits and Exclusions

There are no express warranties except as listed above. The warrantor shall not be liable for incidental or consequential damages resulting from the use of this product, or arising out of any breach of this warranty. All express warranties are limited to the warranty period set forth above . Some states do not allow the exclusion or limitation on how long an implied warranty lasts, so the above limitations may not apply to you.

This warranty gives you specific legal rights and you may also have other rights which vary from state to state or country to country.

Location of Product Labels

Behind left Door Panel for Basic Shed.

On Side Panel for Extensions.

SAFETY & PRECAUTIONS

Before You Begin...

1. Check your local building codes regarding footings, location, etc.

2. Select a site that allows enough working space around the shed.

3. Determine building foundation and anchor system.

4. Read and understand the Owner's manual enclosed in the package.

5. Follow all directions and dimensions thoroughly.

6. Follow the steps given in the manual carefully for correct assembly.

7. Make sure all parts are present before you start assembling.

8. BE SAFE : Follow safety instructions and avoid injury. (See inside page).

9. GROUND MUST BE EVEN : Make sure the foundation frame lies flat on the ground. If the earth bed is uneven, remove sod and other debris and level it with a flat shoval.

10. Separate contents of the carton by the part number and review the list.
Be sure you have all the necessary parts for your shed.
Refer Owner's manual for part list.

SAFETY & PRECAUTIONS

For your own safety, please read and follow these instructions during the shed assembly.

1. Always wear work gloves, long sleeves and eye protection during assembly of the shed. Some pieces of the shed contain sharp edges and can cause injury.

2. Be cautious with the tools used for the assembly of the shed. Familiarize yourself with the operation of all the power tools.

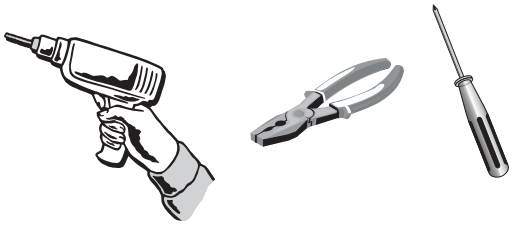

3. Children and pets should be kept away from the assembly site to avoid any distractions and accidents.

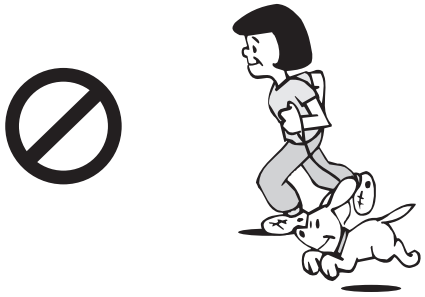

4. When using a step ladder, make sure it is on even ground and fully open with the safety latch in place. Never concentrate your full weight on the roof or any part of the shed.

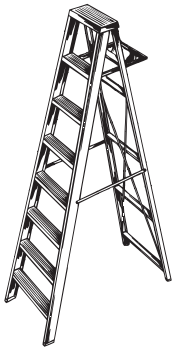

5. Do not attempt to assemble the shed on a windy day. Shed panels can be whipped across by the wind making the worksite difficult and dangerous.

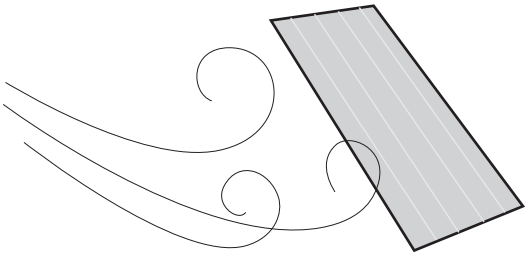

IMPORTANT

☞ Wear eye protection when using any form of power tools. Do not use voltage power tools in a wet or damp enviornment to avoid electric shock.

☞ Do not use any part of the shed as a means of personal support while attaching components during assembly.

☞ **The shed must be constructed on a solid base foundation.** A concrete pad or a large size concrete patio stone squares is recommended for suitable floor base. Make sure it is firm and level and will allow drainage away from the site. The base foundation should be at least 4 inches (100mm) larger than the shed dimensions. Please refer to the front page of your owner's manual for the exterior dimensions of the shed. **Manufacturer is not responsible for the choice and construction of the foundation.**

For a concrete pad base, prepare a level bed for a firm footing layer of crushed stone. The concrete pad should then be poured to a thickness of 4 inches (100mm) to 5 inches (125mm). Allow to dry thoroughly for at least 48 hours

☞ Your shed must be firmly anchored to the concrete pad or large concrete patio stone squares, to help protect against damage in high winds.

Care & Maintenance

Although this unit does not require any maintenance, care should be taken to prolong the life of your shed.

ROOF : Keep roof clean of leaves and snow with long handled, soft bristled broom. Heavy amounts of snow on the roof can damage the shed making it unsafe. **Do not step on the roof.**

WALLS : Do not rest any object against the wall panels of the shed.

DOORS : Keep doors closed to prevent wind damage.

FASTENERS : Regularly check your shed for loose screws, bolts, nuts, etc. And retighten them as necessary.

MOISTURE : With changing temperatures, condensation will accumulate inside the shed. Good ventilation will help in regulating and avoid moisture.

TIP : A noncorrosive caulking is helpful to seal the shed.

DO NOT store swimming pool chemicals in your building.
Combustibles and corrosive must be stored in
air tight containers

Parts List

PARTS

CODE	QTY	CODE	QTY
B1LA	1	RS8A	4
B1RA	1	RS9A	4
B21	2	MJ	7
B22	2	RS10A	2
B3LA	1	RS11A	2
B3RA	1	RS12A	2
CB1A	2	RS14A	12
CB2A	2	DSH	1
CB3XA	4	CMA	7
CB4A	2	CCA	4
RS1A	4	CDLA	1
RS2A	4	CDRA	1
RS3LA	2	SP↟	12
RS3XA	2	FPL	2
RS4XA	4	FPR	2
RS5A	4	RP↟	6
RS6XA	2	RRS	3
RS7XA	2	DL	1
		DR	1

ACCESSORIES

CODE	QTY
FDCL	1
FDCR	1
FCC	4
FMC	7
FCB	4
RJ	4
EPS	4
CBC	3
PPG	80
PIN	80
S1	253
S2	8
S7	16

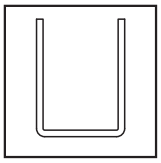
B1LA, B1RA, B21, B22, B3LA, B3RA

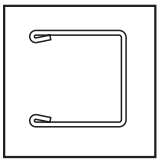
CB1A, CB2A, CB3XA, CB4A, MJ

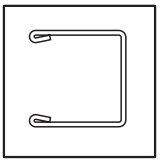
RS1A, RS3XA, RS3LA, RS8A, RS9A

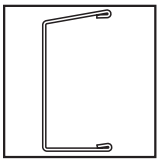
RS5A, RS6XA, RS7XA

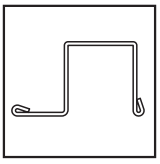
RS2A, RS10A

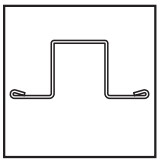
RS4XA, RS11A, RS12A

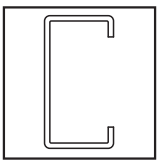
DSH

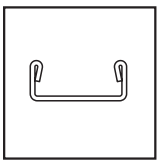
RS14A

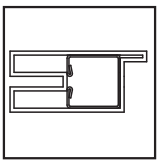
CDLA

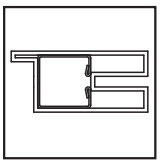
CDRA

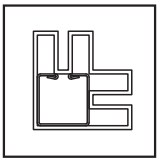
CCA

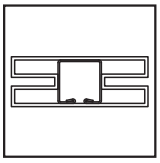
CMA

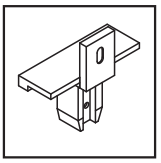
FMC

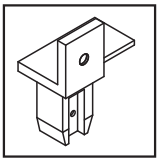
FDCL

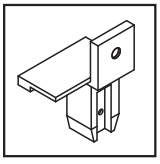
FDCR

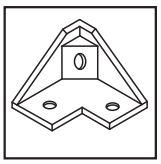
FCB

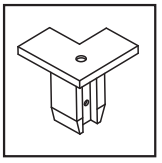
FCC

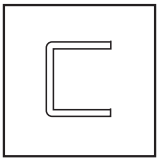
CBC

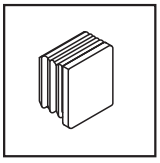
EPS

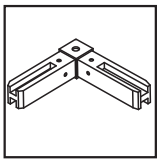
RJ

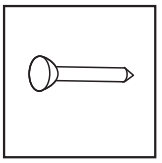
PIN

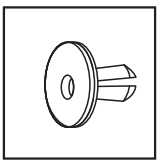
PPG & PWS

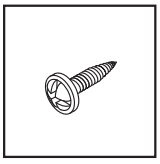
S1, S2, S7

Note

1. Before starting installation, please refer Safety & Precautions.

2. Maximum no. of Extension can be build upto 10'x13' (ie. One Extension).

3. Shed with more than two extensions require Roof Super Support.

<u>Recomended Qty of Roof Super Support</u>

For 10'x10' Vinyl Shed - 3Nos.
For additional each Extension - 1No.

Tools You Will Need

Cordless Drill - Philips Head
Hammer or Rubber mallet
Carpenters Square
8' Step Ladder
Adjustable pliers
Level - 3ft.
Tape Measure
Caulk Gun
Waterproof Clear Silicon Sealant
Hand Gloves

10’ x 8’ Exploded View

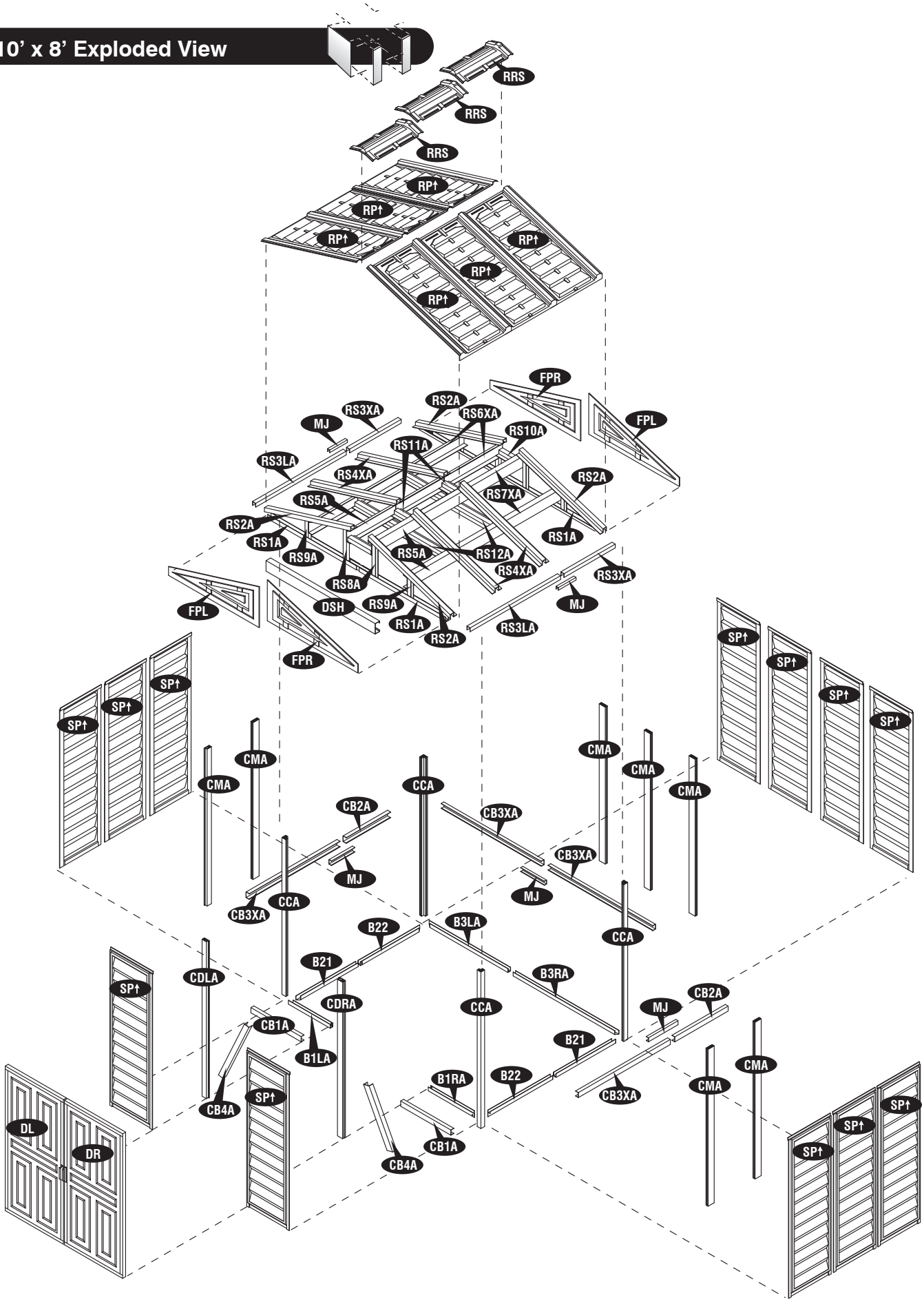

One extension Parts List

PARTS

CODE	QTY
EXTL	1
EXTR	1
CB3A	2
RS3SA	2
RS4A	2
RS6A	2
RS7A	2
RS11A	1
RS12A	1
RS13A	8
RS14A	4
CMA	2
SP↑	2
RP↑	2
RRS	1

ACCESSORIES

CODE	QTY
FMC	2
PPG	16
PIN	16
S1	40
S3	56

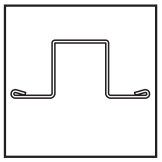

RS4A, RS11A, RS12A

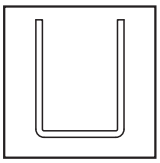

EXTL, EXTR

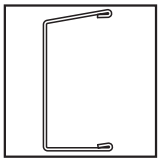

RS6A,RS7A,RS13A

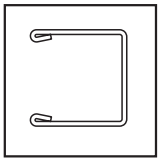

CB3A

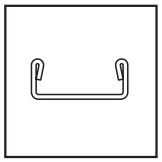

RS14A

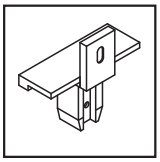

FMC

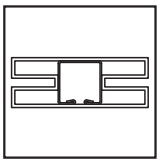

CMA

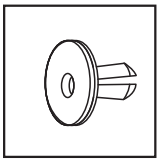

PPG & PWS

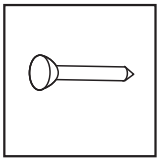

PIN

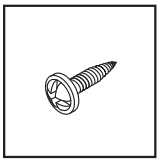

S1

Exploded View with one extension

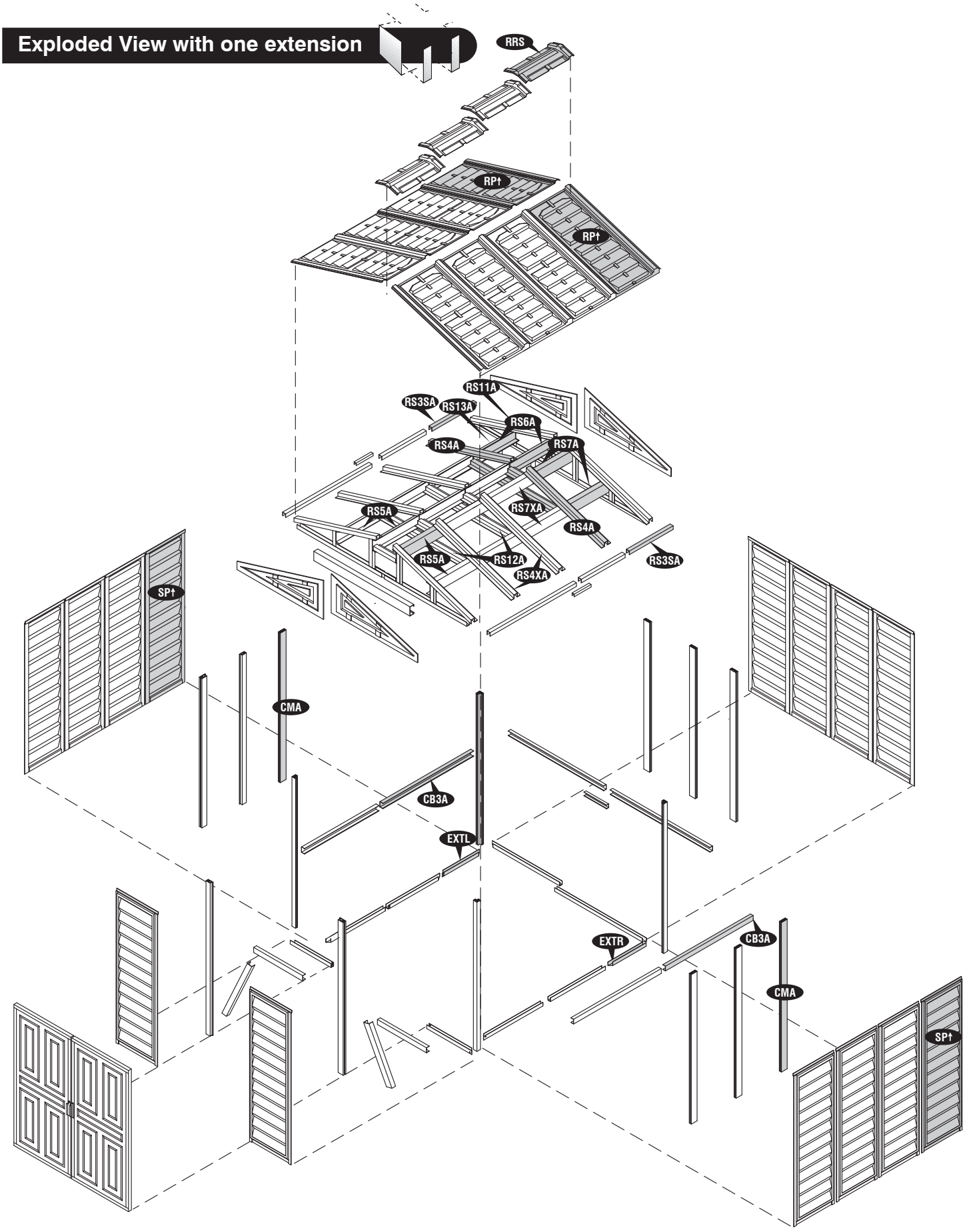

A. Foundation

Note : If you have DURAMAX Foundation, please follow instruction manual in that package. If not, follow below wooden platform instruction.

DuraMax must be installed on a level wooden platform or a level concrete foundation.

Part 1:Assembling shed with Extension kit

Note

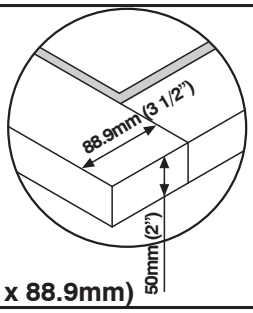

Lay 2 x 4
(Actual size 2"x 3 1/2", 50mm x 88.9mm)

Wooden Platform (Not Included)

The following are the list of lumber and sizes you will need.

Pressure Treated - Wood Studs:
4ea 2" x 3 1/2" x 126" (50mm x 88.9mm x 3200 mm)
6ea 2" x 3 1/2" x 87 7/8" (50mm x 88.9mm x 2232 mm)
3ea 2" x 3 1/2" x 24 1/8" (50mm x 88.9mm x 613 mm)
Exterior Grade (CDX) - 3/4" (19mm) plywood
2ea 3/4" x 48" x 94 7/8" (19mm x 1219.2mm x 2410 mm)
1ea 3/4" x 30" x 94 1/8" (19mm x 762mm x 2410 mm)
2ea 3/4" x 63" x 31 1/8" (19mm x 1600 mm x 790mm)

L-Brackets: 8ea

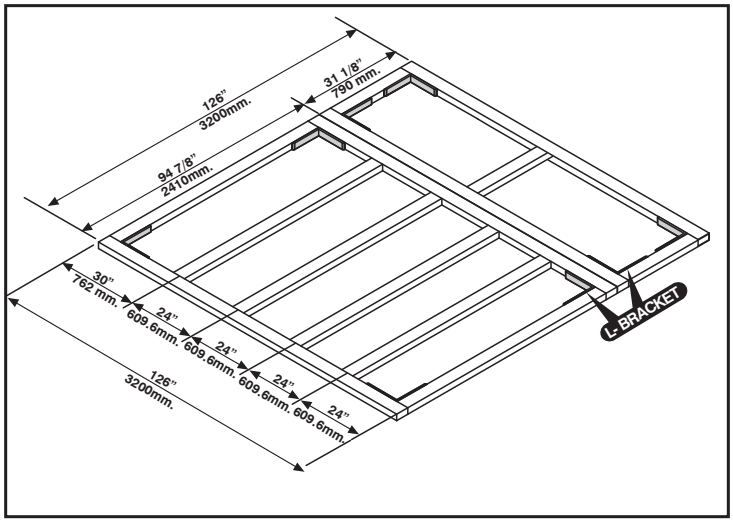

1. Use pressure treated wood studs **2 x 4 (Actual size 2" x 3 1/2", 50mm x 88.9mm)** to create a platform frame that has an outside dimension of **126" x 126" (3200mm x 3200mm)**.

2. Using exterior grade **CDX 3/4" (19mm)** plywood, cut and fit together the sheets to form solid foundation as shown. Foundation must be square and level.

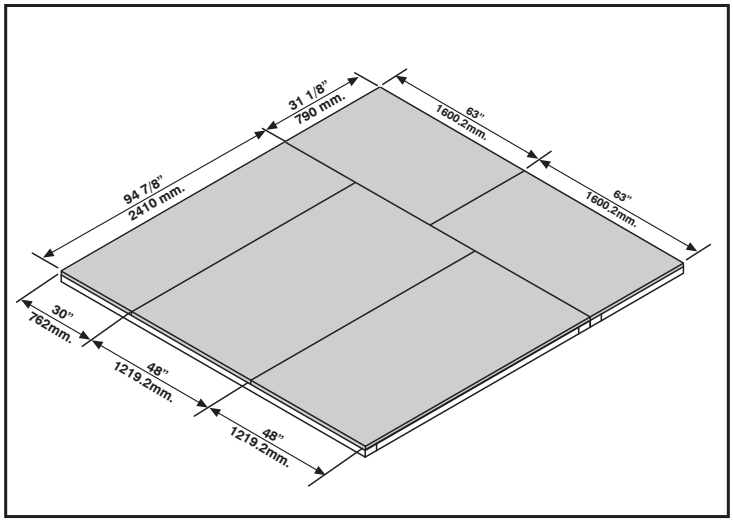

Note

If the shed is assembled with wooden foundation on soil, use the soil anchor kit.

Concrete Platform

The shed must be constructed on a solid base foundation. A concrete pad or a large size concrete patio stone squares is recommended for suitable floor base. Make sure it is firm and level and will allow drainage away from the site. The base foundation should be at least 4 inches(100mm)larger than the shed dimensions. Please refer to the front page of your owner's manual for the exterior dimensions of the shed. **Manufacturer is not responsible for the choice and construction of the foundation**

Note

For a concrete pad base, prepare a level bed for a firm footing layer of crushed stone. The concrete pad should then be poured to a thickness of 4 inches (100mm) to 5 inches (125mm). Allow to dry thoroughly for at least 48 hours

B. Base Frame

Note

1. ***It is important that these instructions are followed step by step.***
2. ***All parts are clearly marked and care should be taken to use the correct one.***
3. ***Don't install under windy conditions.***
4. ***If you are building the shed against a wall, build it 2.5 ft. away then slide it in.***

Parts Needed:	
Code	**Qty**
B1LA	1
B1RA	1
B3LA	1
B3RA	1
B21	2
B22	2
S1	32

Parts Needed for Extension:	
Code	**Qty**
EXTL	1
EXTR	1
S1	6

1

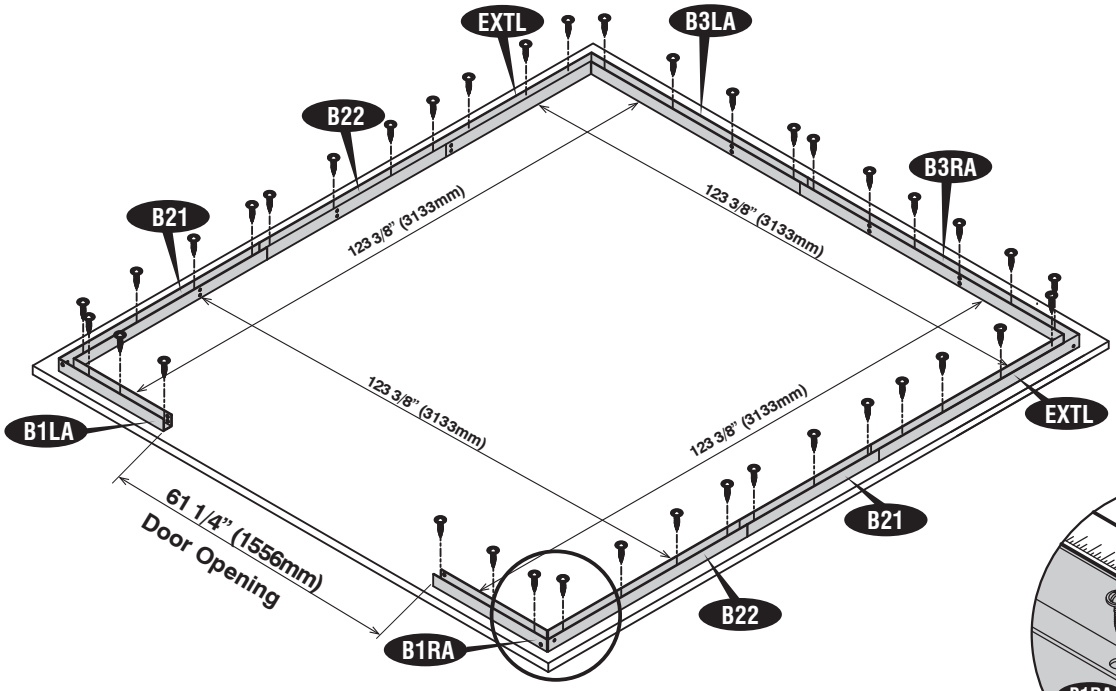

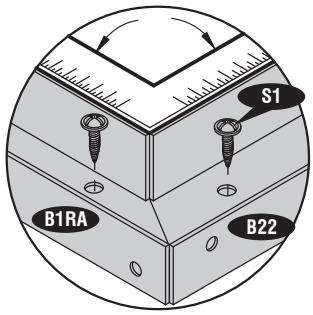

Note

Measure in all direction as shown in figure to make the base channel assembly in a perfect square.

Assembly on concrete foundation

Using a carpenter square, line up corners. Align base bars, mark the concrete at the holes in the base and drill concrete with suitable concrete bit to accept 1/4" x 1 1/2" (M6 x 40mm) anchor bolts.
(Qty - 38Nos. not provided).

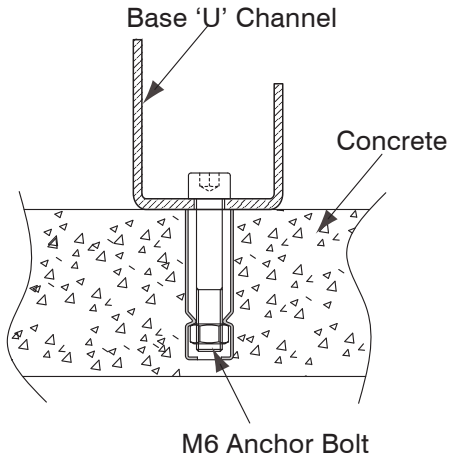

C. Wall & Columns

Parts Needed:	
Code	**Qty**
CMA	7
CCA	4
CDLA	1
CDRA	1
CB1A	2
CB3XA	4
MJ	1
CB4A	2
FCB	4
CBC	1
SP↑	12
S1	57
S2	4

Parts Needed for Extension	
Code	**Qty**
CMA	2
CB3A	2
SP↑	2
S1	6
S3	2

Note

1.All parts are clearly marked and care should be taken to use the correct one.

2.Set the Torque limit of your Screw drill to #3 or #4 to ensure the screws do not strip the metal reinforcements.

1

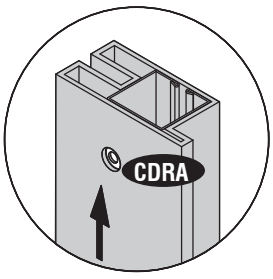

Fig.1

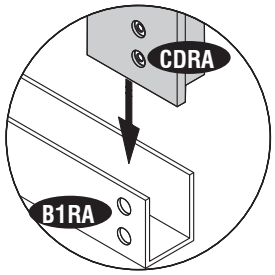

Fig.2

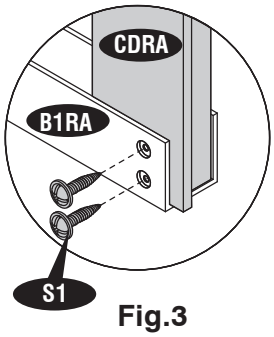

Fig.3

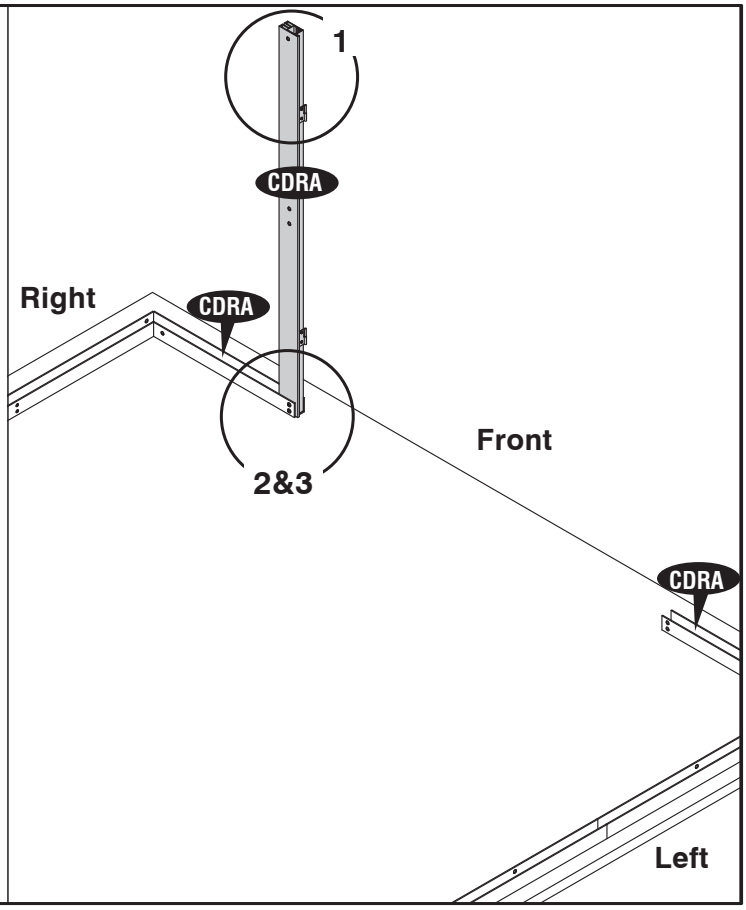

2

Note

Check the stamped label on top of all panels inside.

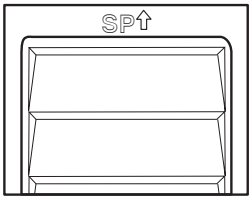

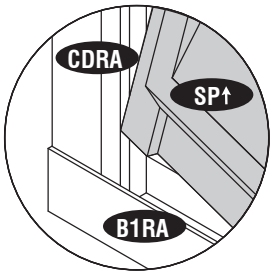

Fig.1

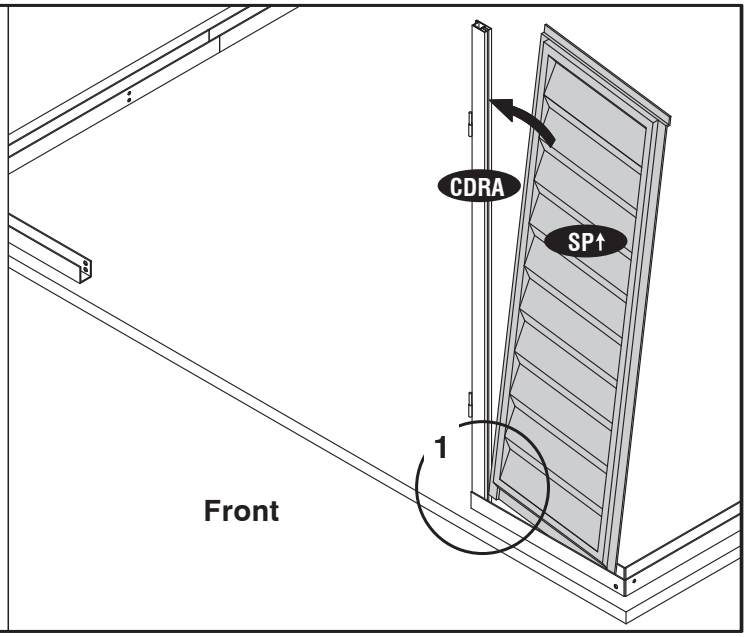

3

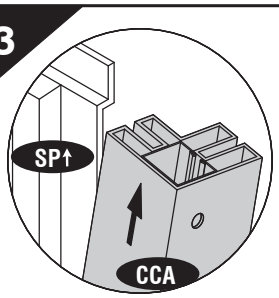

Fig.1

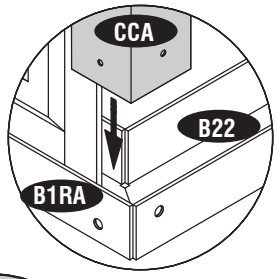

Fig.2

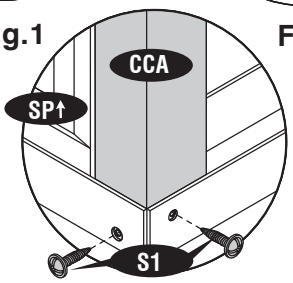

Fig.3

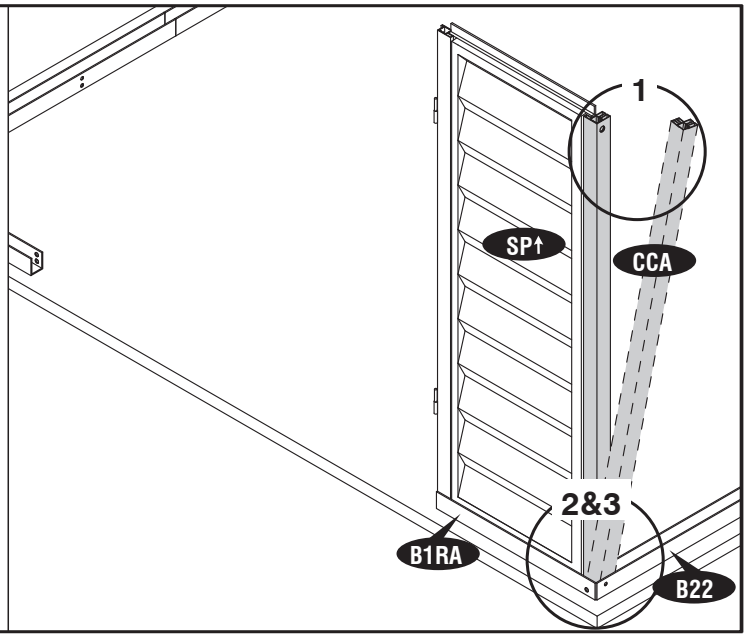

4

Note

Do not tighten the screw. Leave it loose

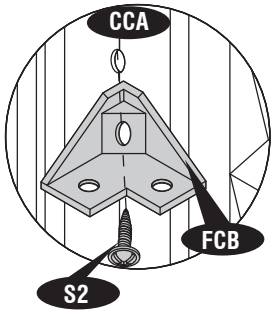

Fig.1

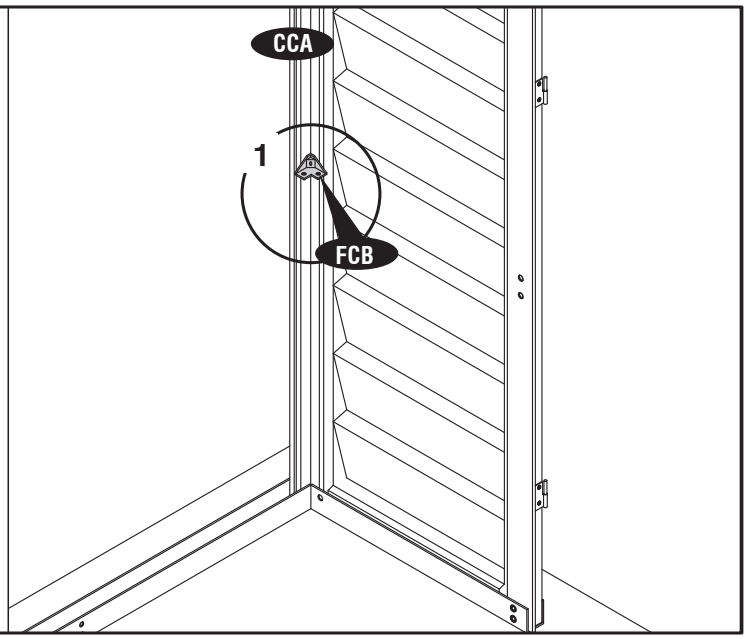

5

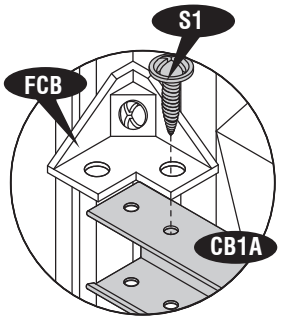

Fig.1

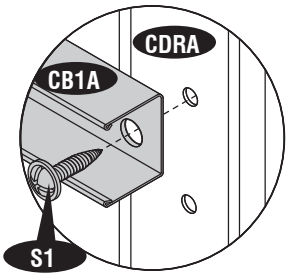

Fig.2

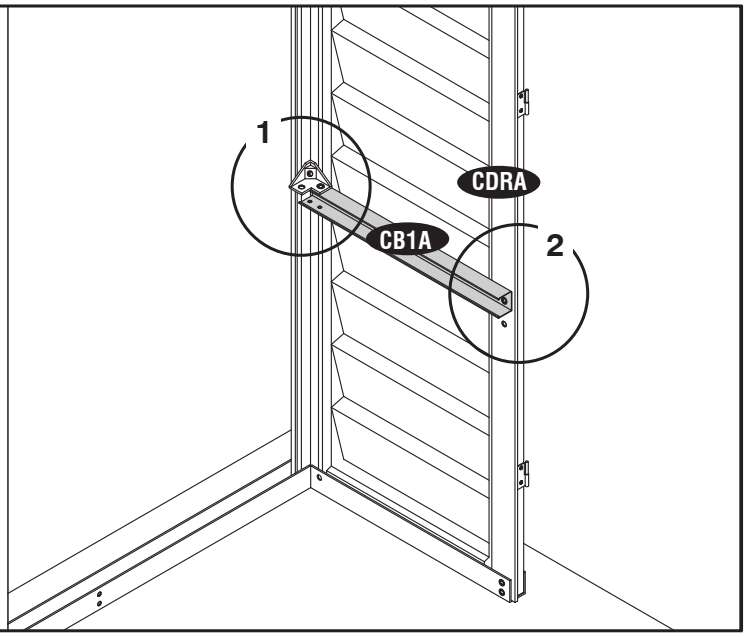

6

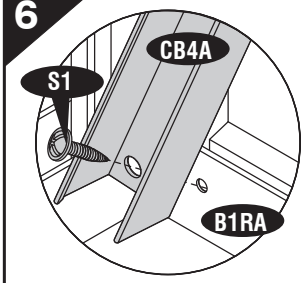

Fig.1

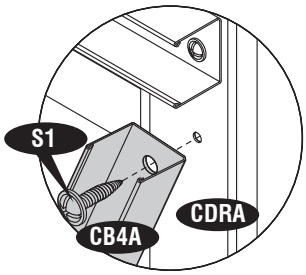

Fig.2

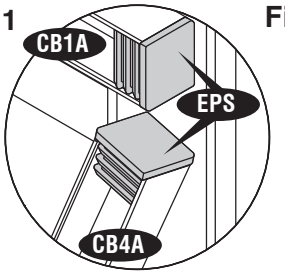

Fig.3

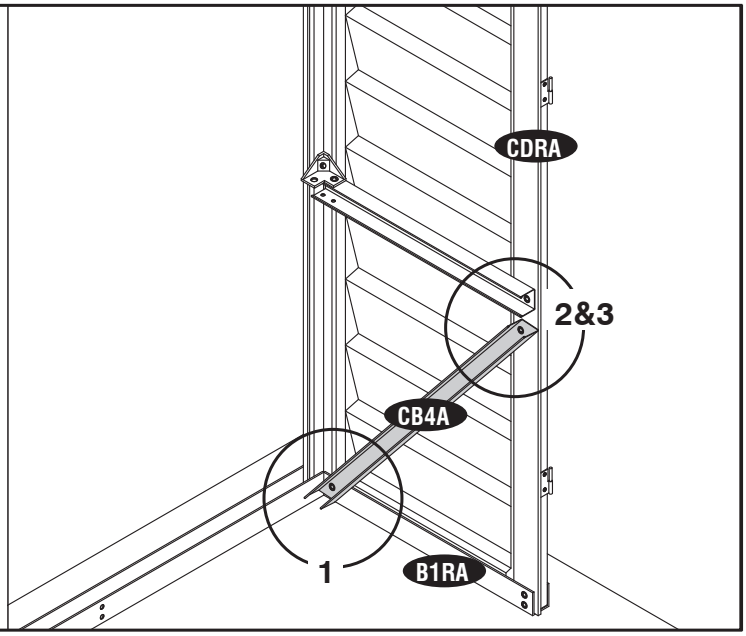

7

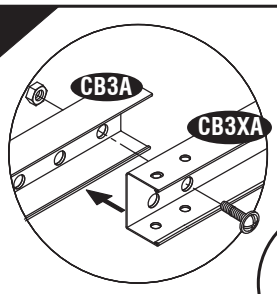

Fig.1

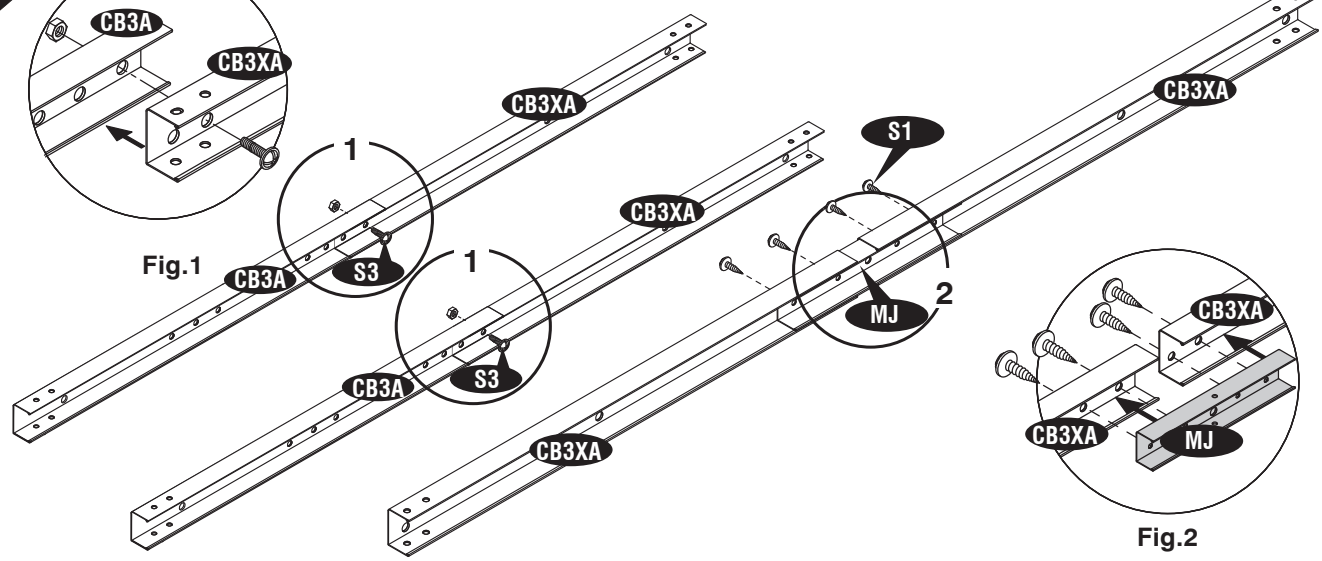

Fig.2

8

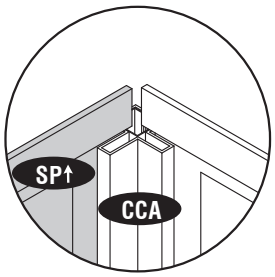

Fig.1

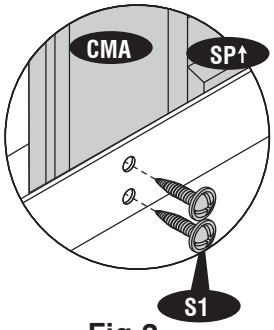

Fig.2

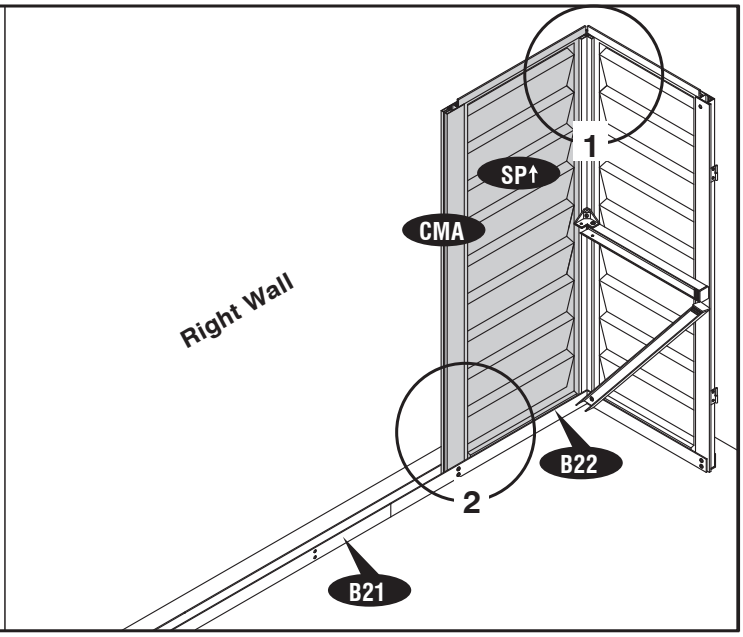

10

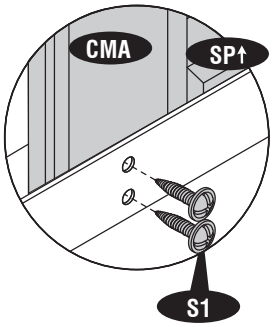

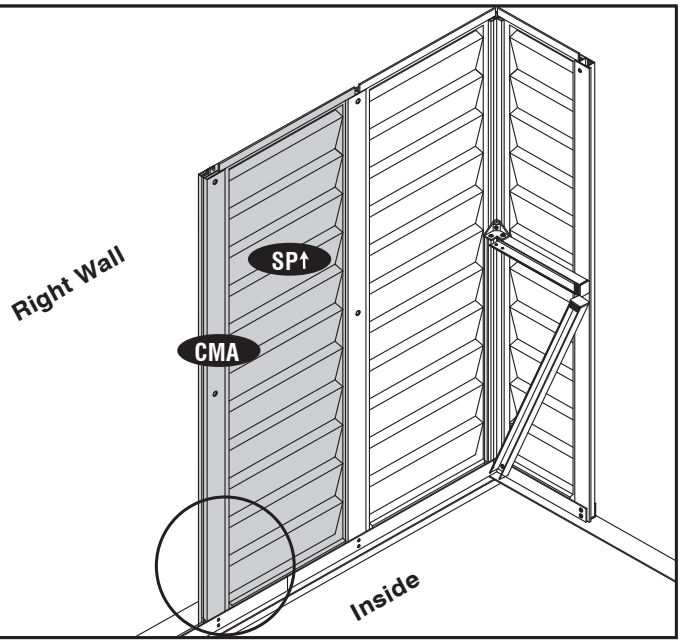

11

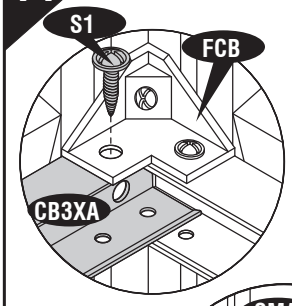

Fig.1

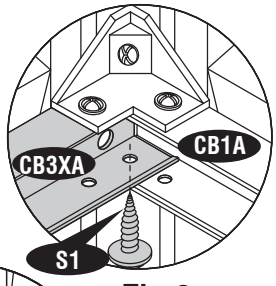

Fig.2

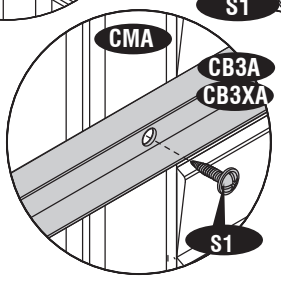

Fig.3

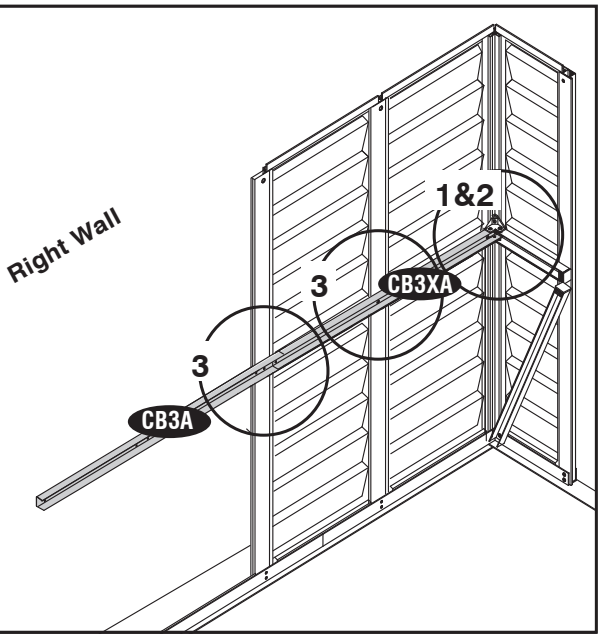

12

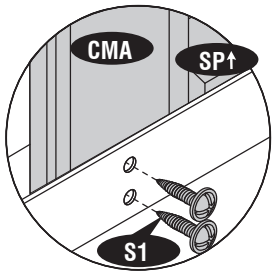

Fig.1

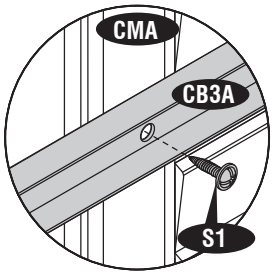

Fig.2

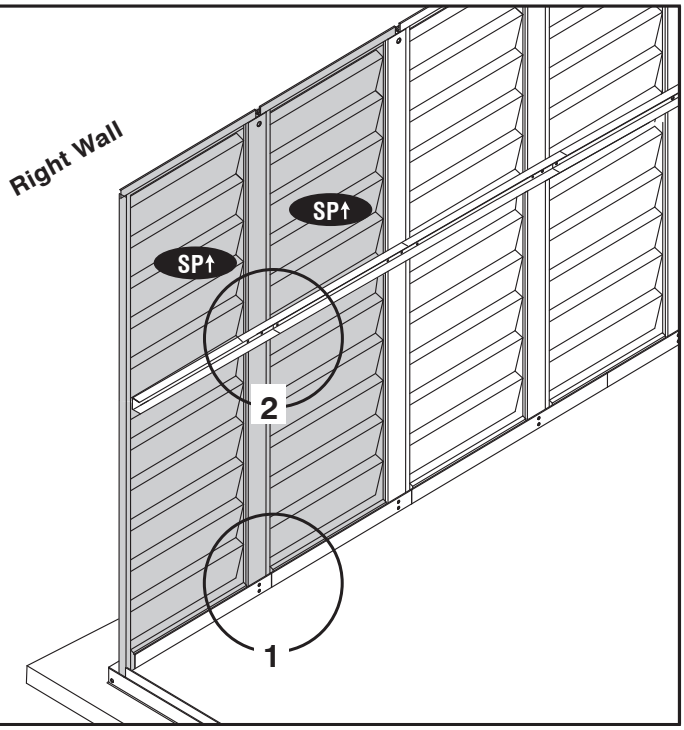

13

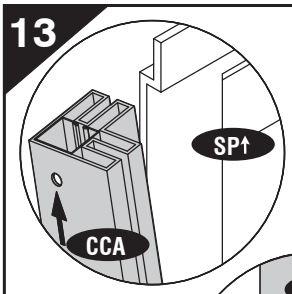

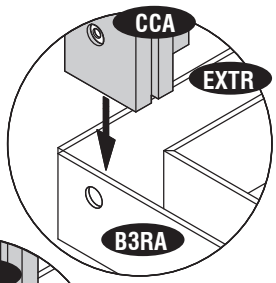

Fig.1 Fig.2

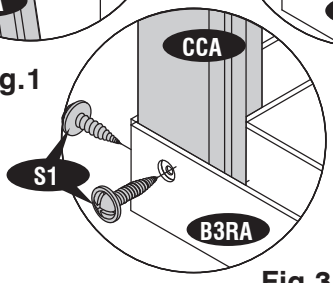

Fig.3

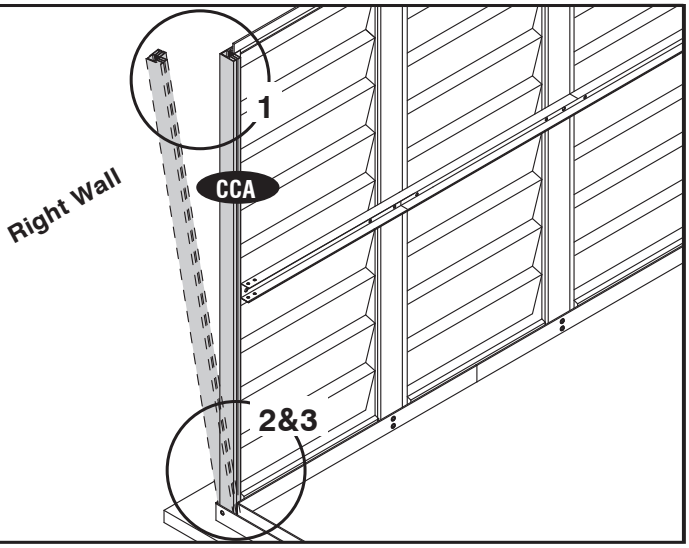

14

Note ***Do not tighten the S2 screw. Leave it loose.***

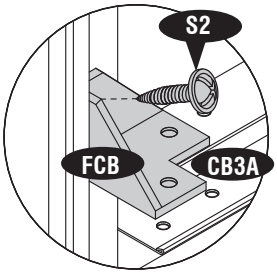

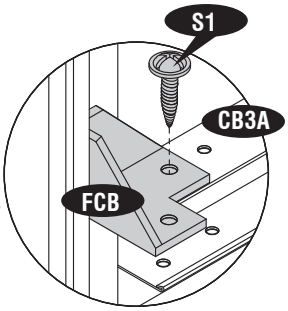

Fig.1 Fig.2

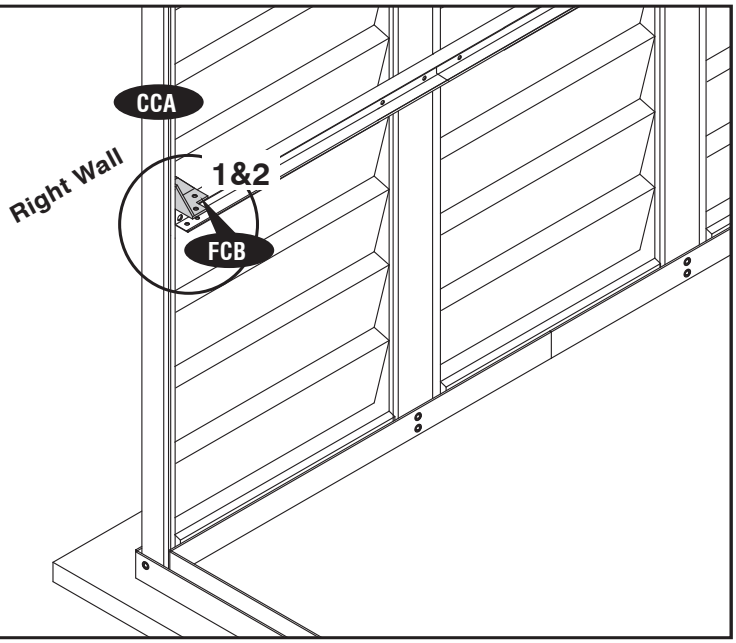

15

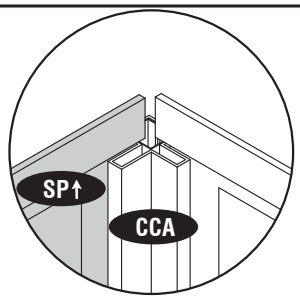

Fig.1

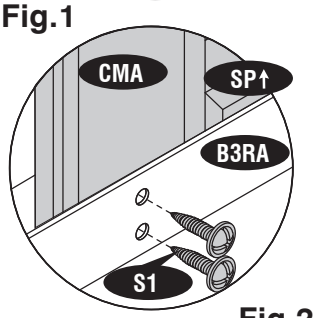

Fig.2

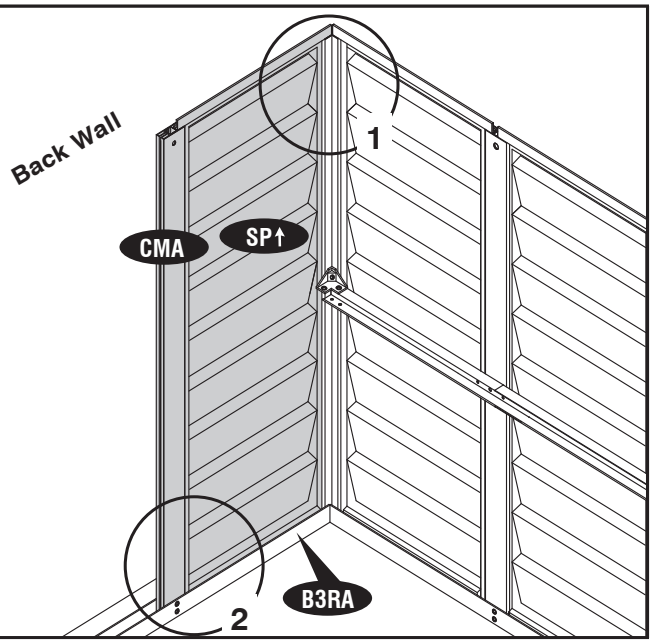

16

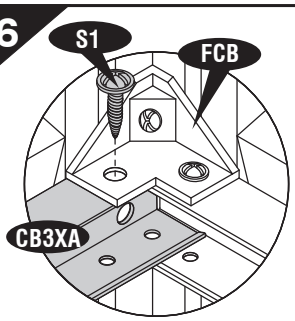

Fig.1

Fig.2

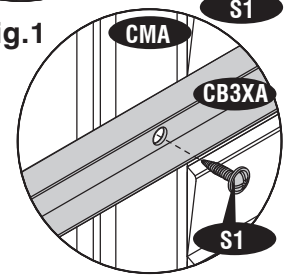

Fig.3

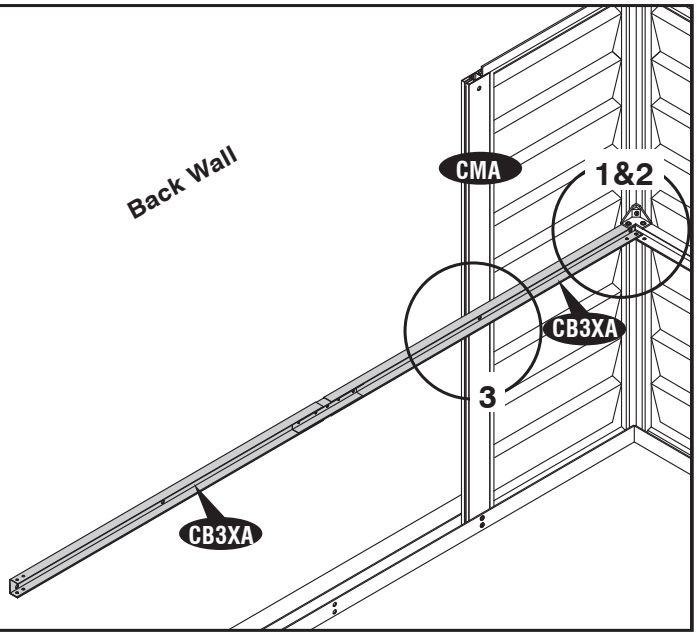

17

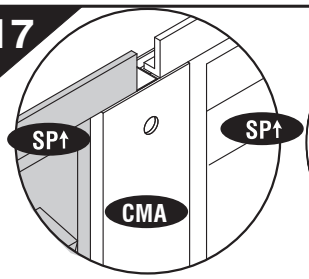

Fig.1

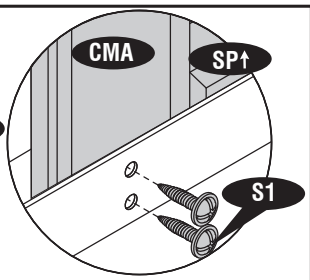

Fig.2

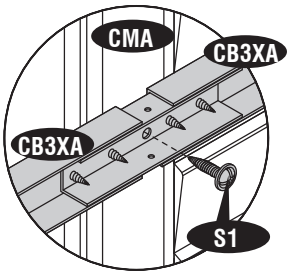

Fig.3

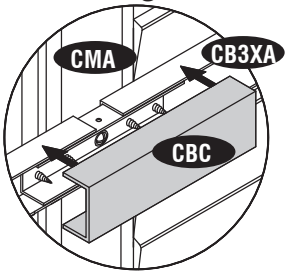

Fig.4

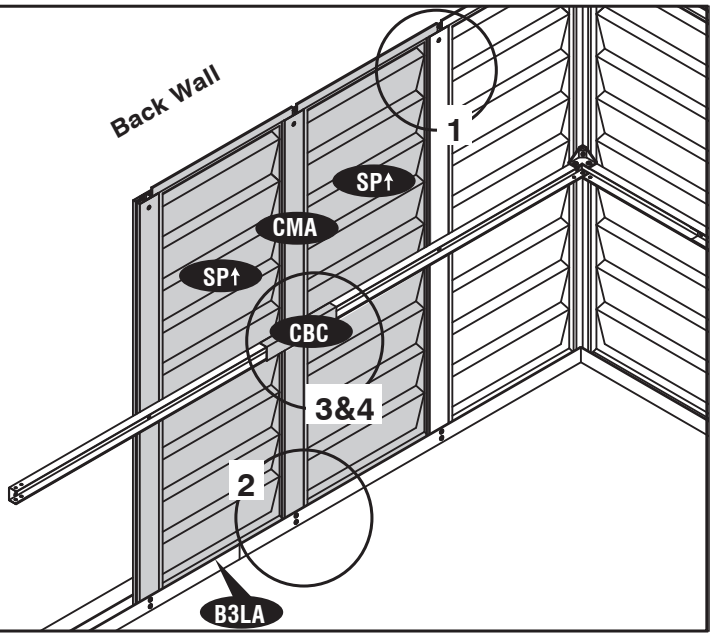

18

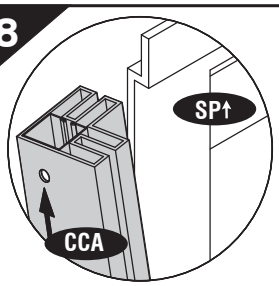

Fig.1

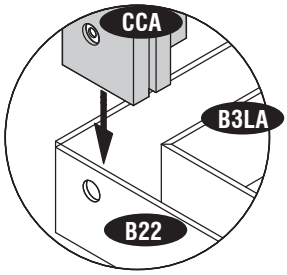

Fig.2

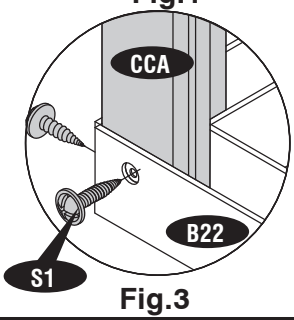

Fig.3

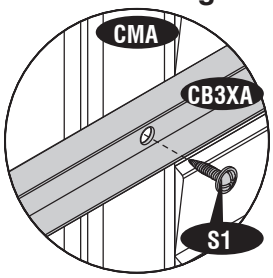

Fig.4

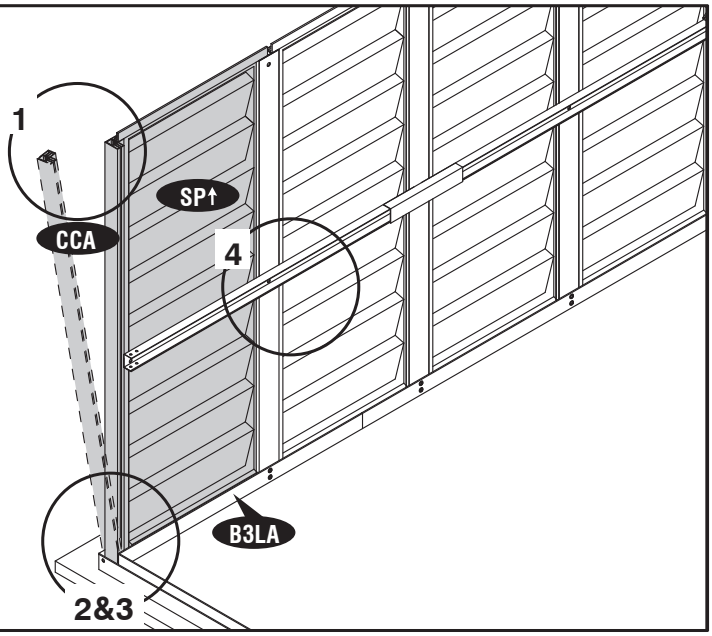

19

Note ***Do not tighten the S2 screw. Leave it loose.***

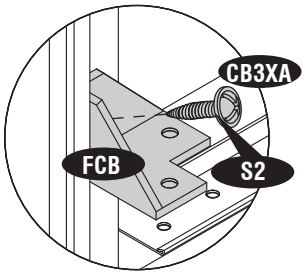

Fig.1

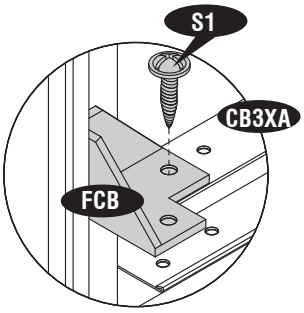

Fig.2

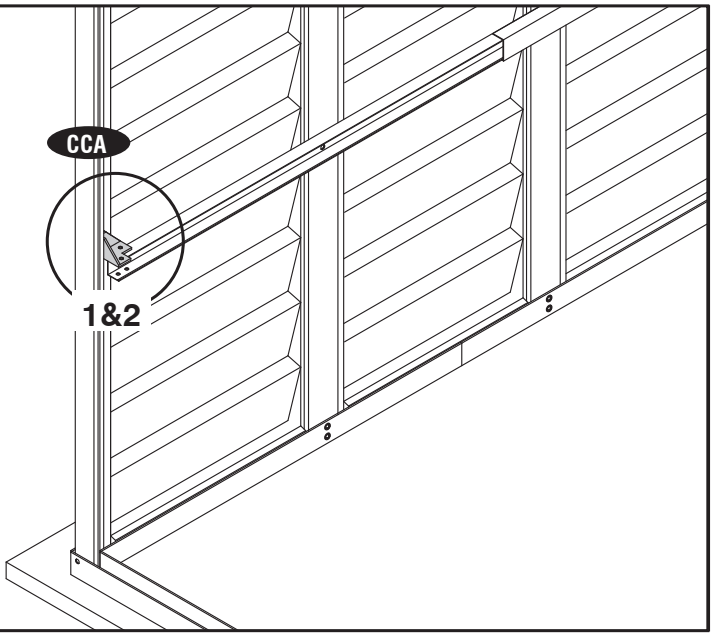

20

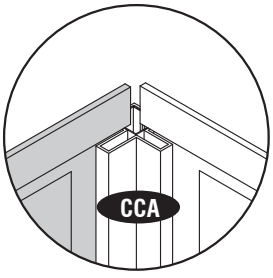

Fig.1

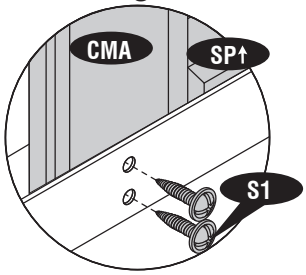

Fig.2

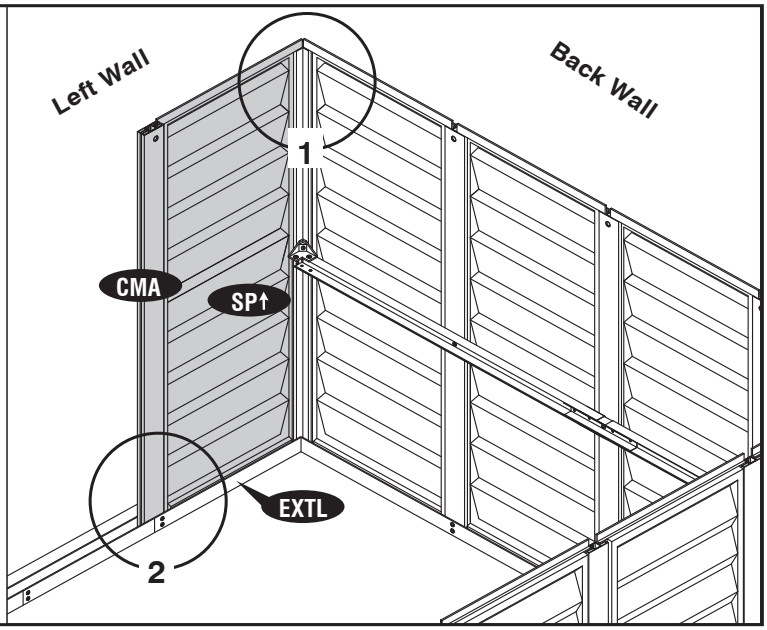

21

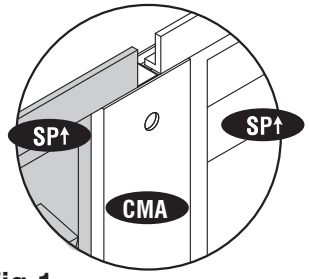

Fig.1

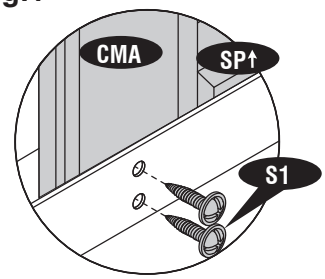

Fig.2

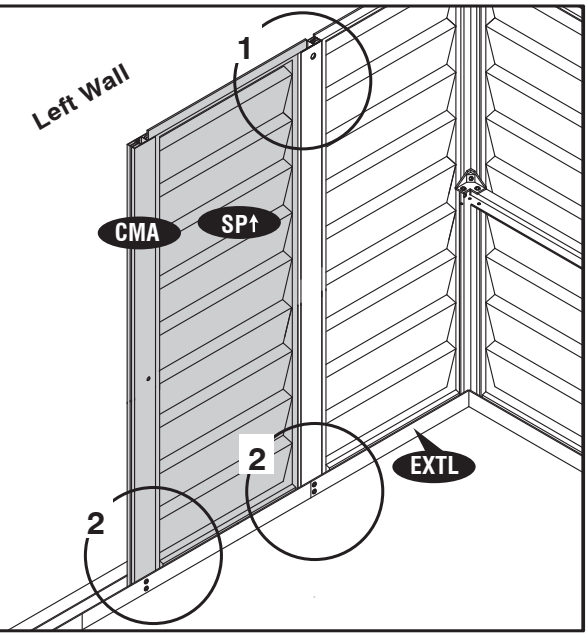

22

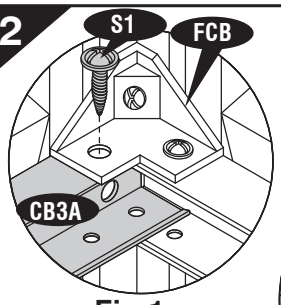

Fig.1

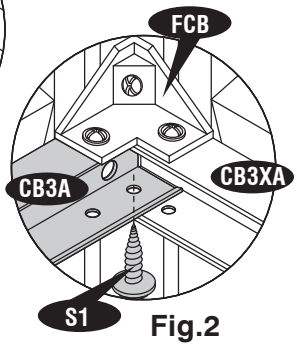

Fig.2

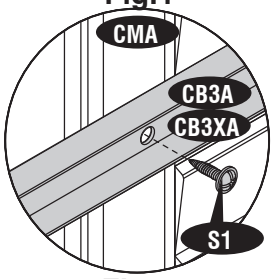

Fig.3

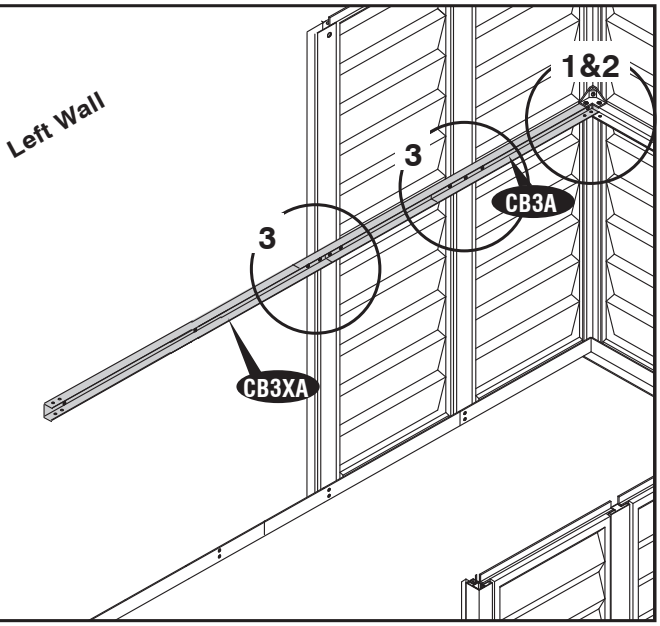

23

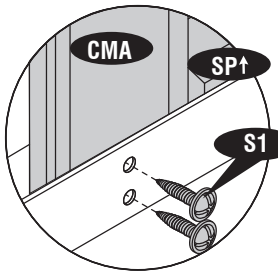

Fig.1

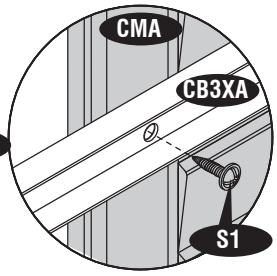

Fig.2

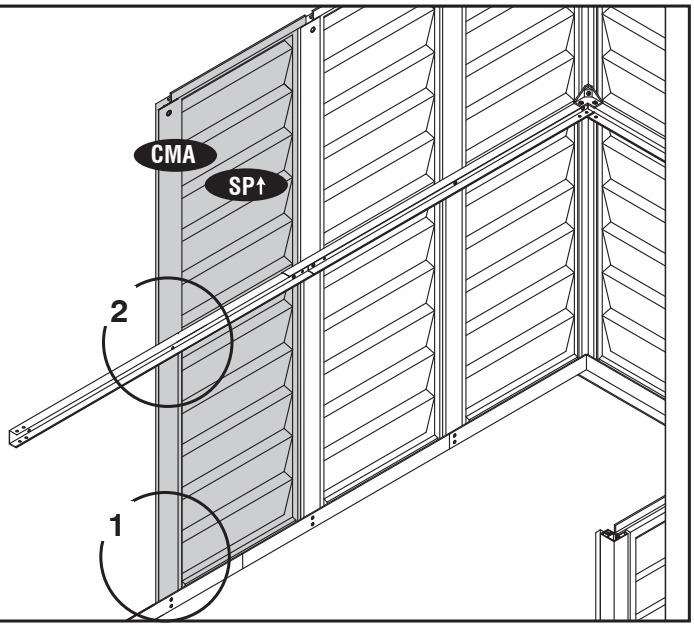

24

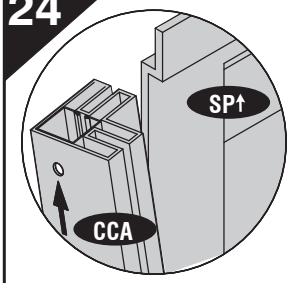

Fig.1

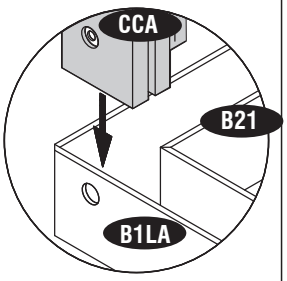

Fig.2

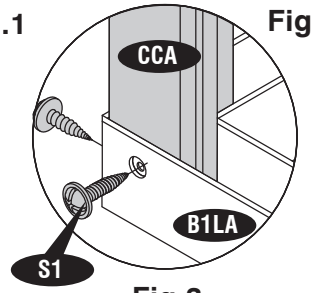

Fig.3

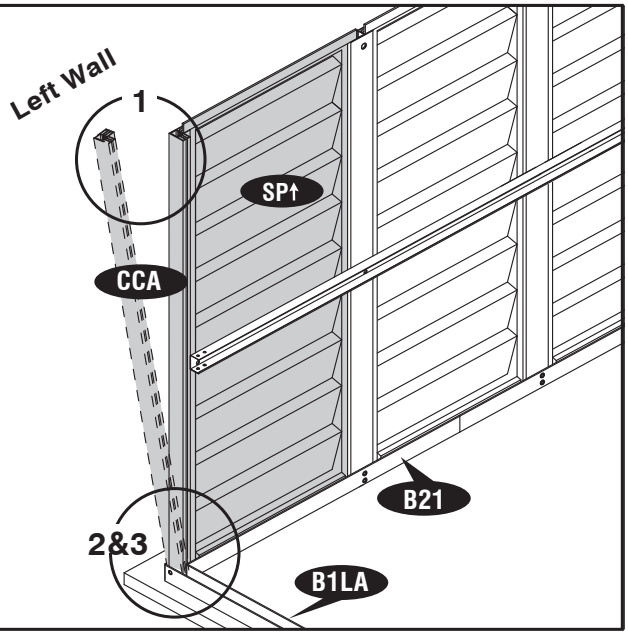

25

Note ***Do not tighten the S2 screw. Leave it loose***

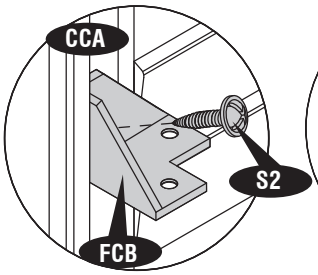

Fig.1

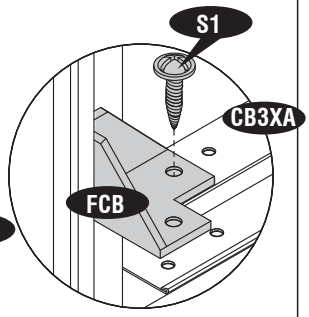

Fig.2

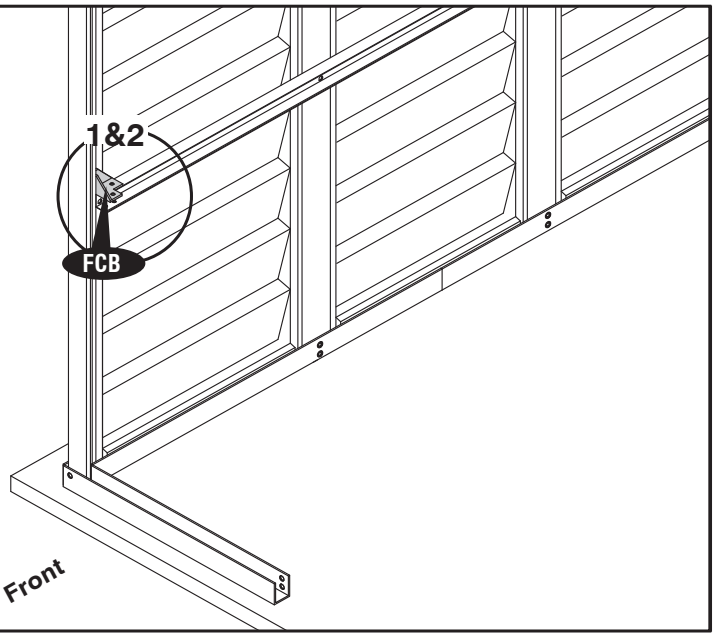

26

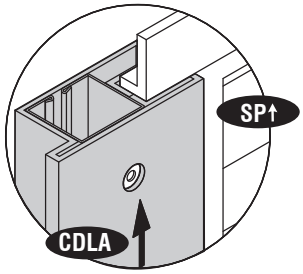

Fig.1

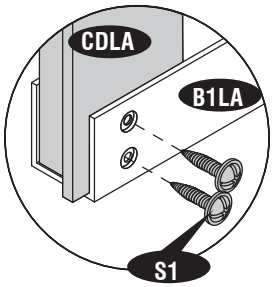

Fig.2

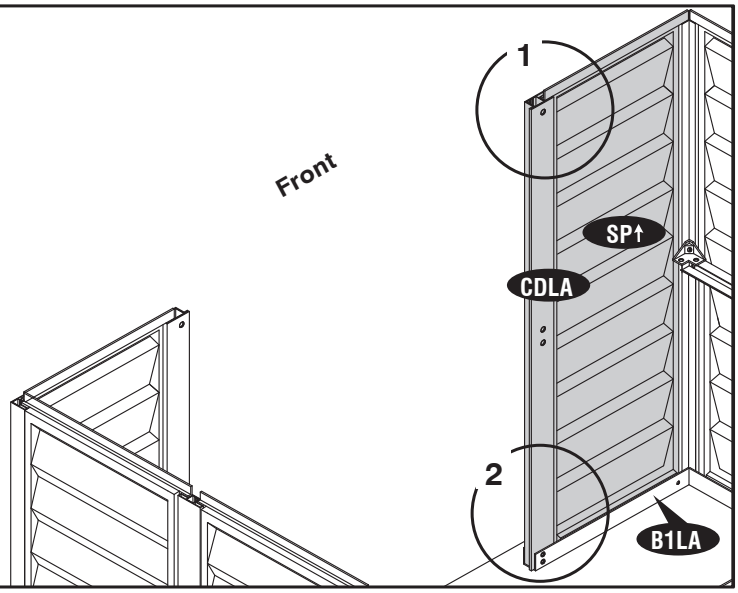

27

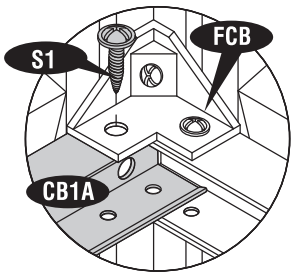

Fig.1

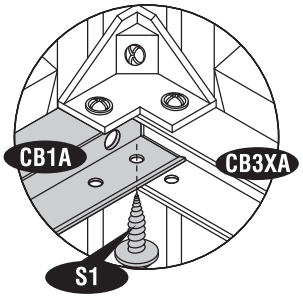

Fig.2

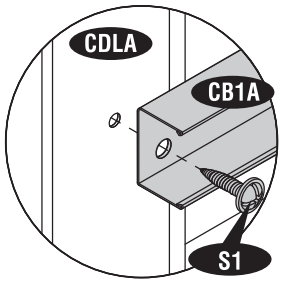

Fig.3

Note

After completing the center band assembly, fully tighten the four center band fittings (FCB) to the corner column (CCA).

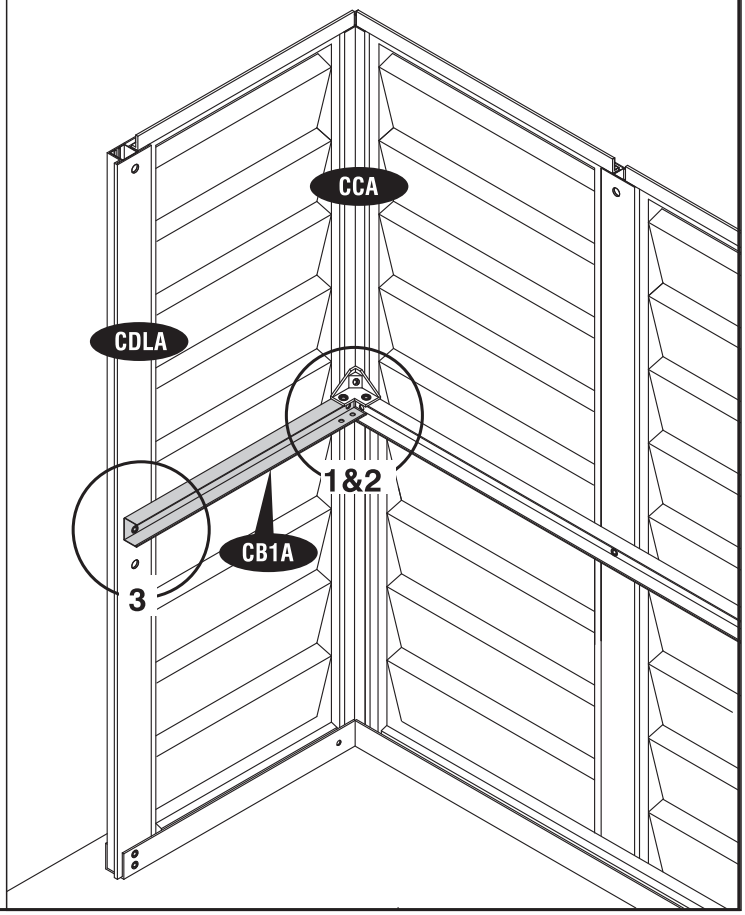

28

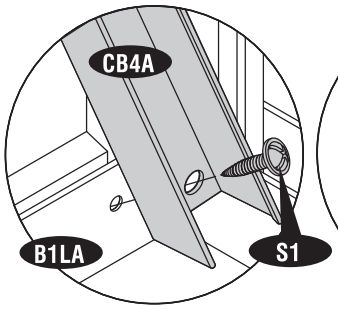

Fig.1

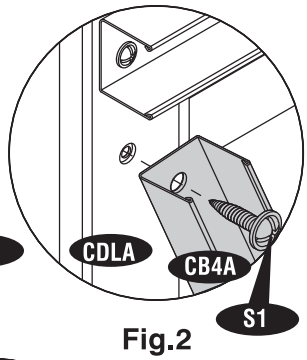

Fig.2

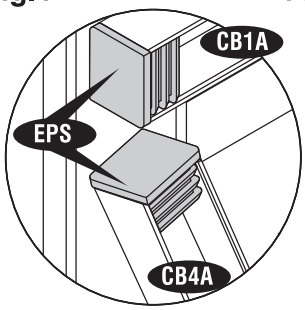

Fig.3

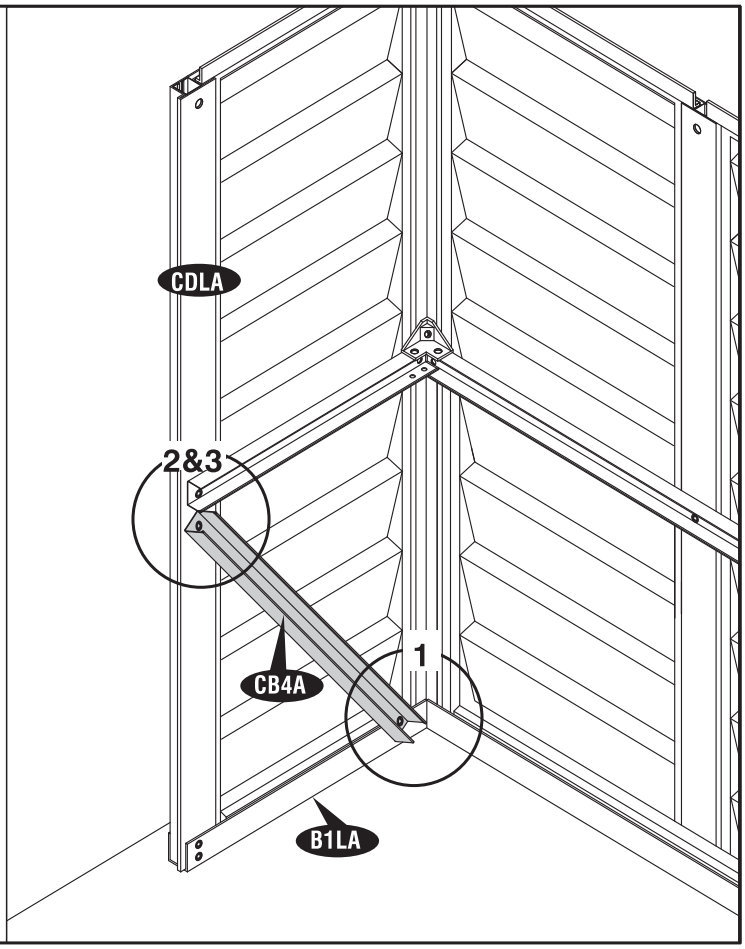

D. Roof Structures

Parts Needed:			
Code	**Qty**	**Code**	**Qty**
RS1A	4	RS11A	3
RS2A	4	RS12A	2
RS3LA	2	DSH	1
RS3XA	2	FDCL	1
RS4XA	4	FDCR	1
RS5A	4	FCC	4
RS6XA	2	FMC	7
RS7XA	2	RJ	4
RS8A	4	S1	155
RS9A	4	S2	4
MJ	4	S3	40
RS10A	2	S7	16

Parts Needed for Extension	
Code	**Qty**
RS6A	2
RS7A	2
RS3SA	2
RS4A	2
RS6A	2
RS7A	2
RS11A	1
RS12A	1
RS13A	8
FMC	2
S1	26
S3	16

1

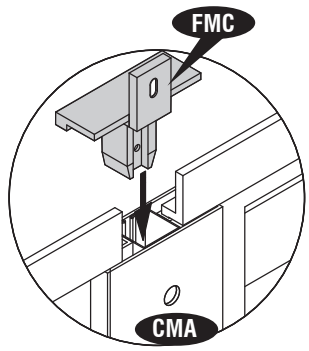

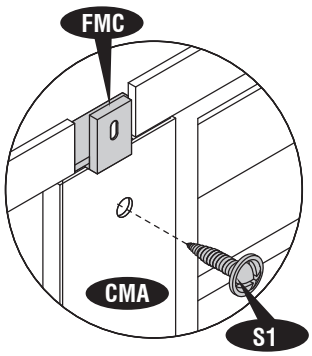

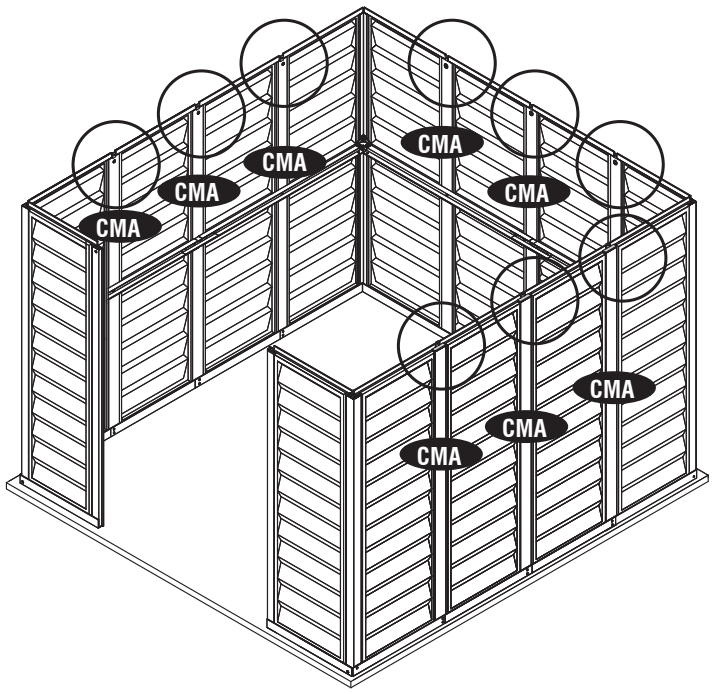

2

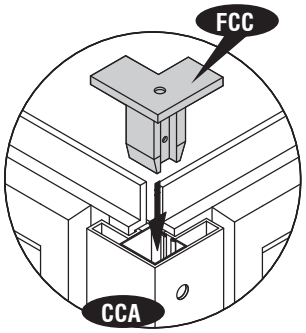

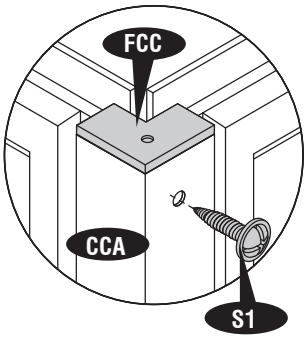

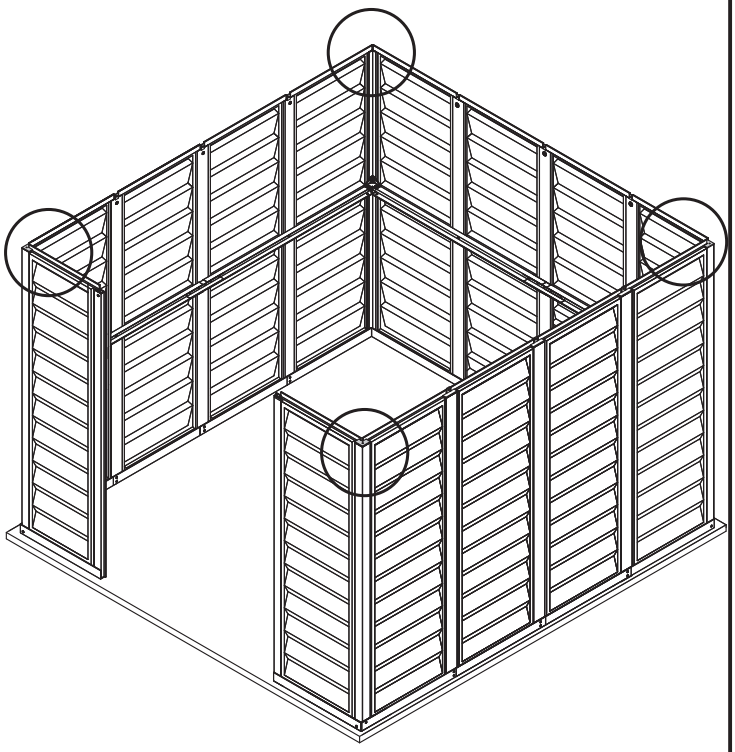

3

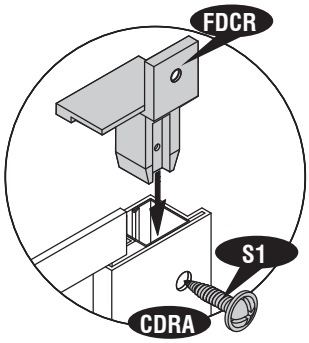

Fig.1

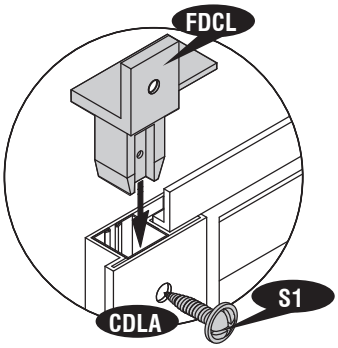

Fig.2

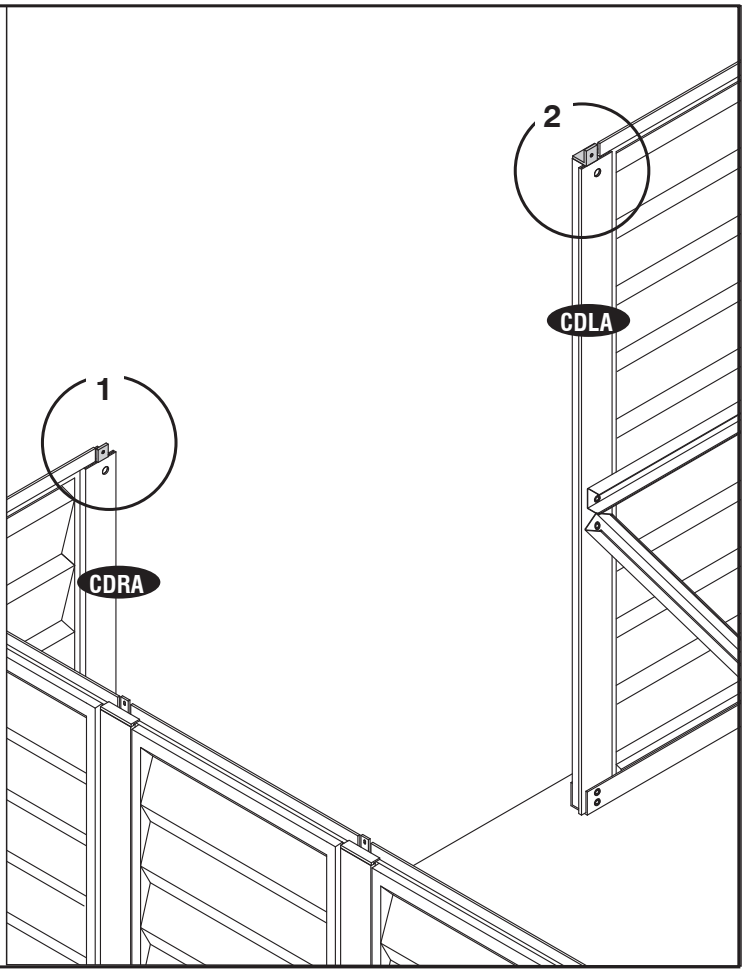

Front roof structure assembly

4

5

6

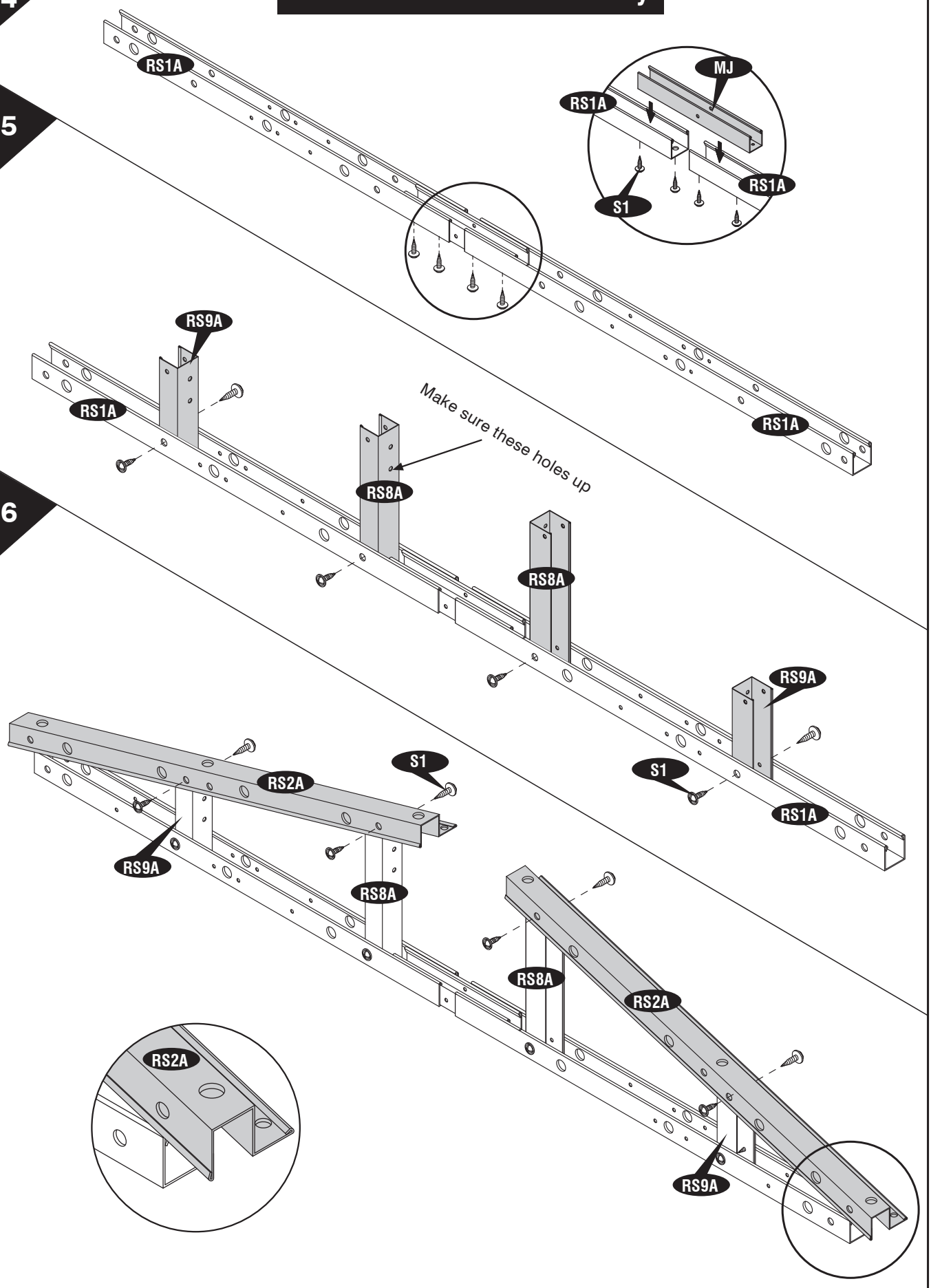

Back roof structure assembly

7

8

9

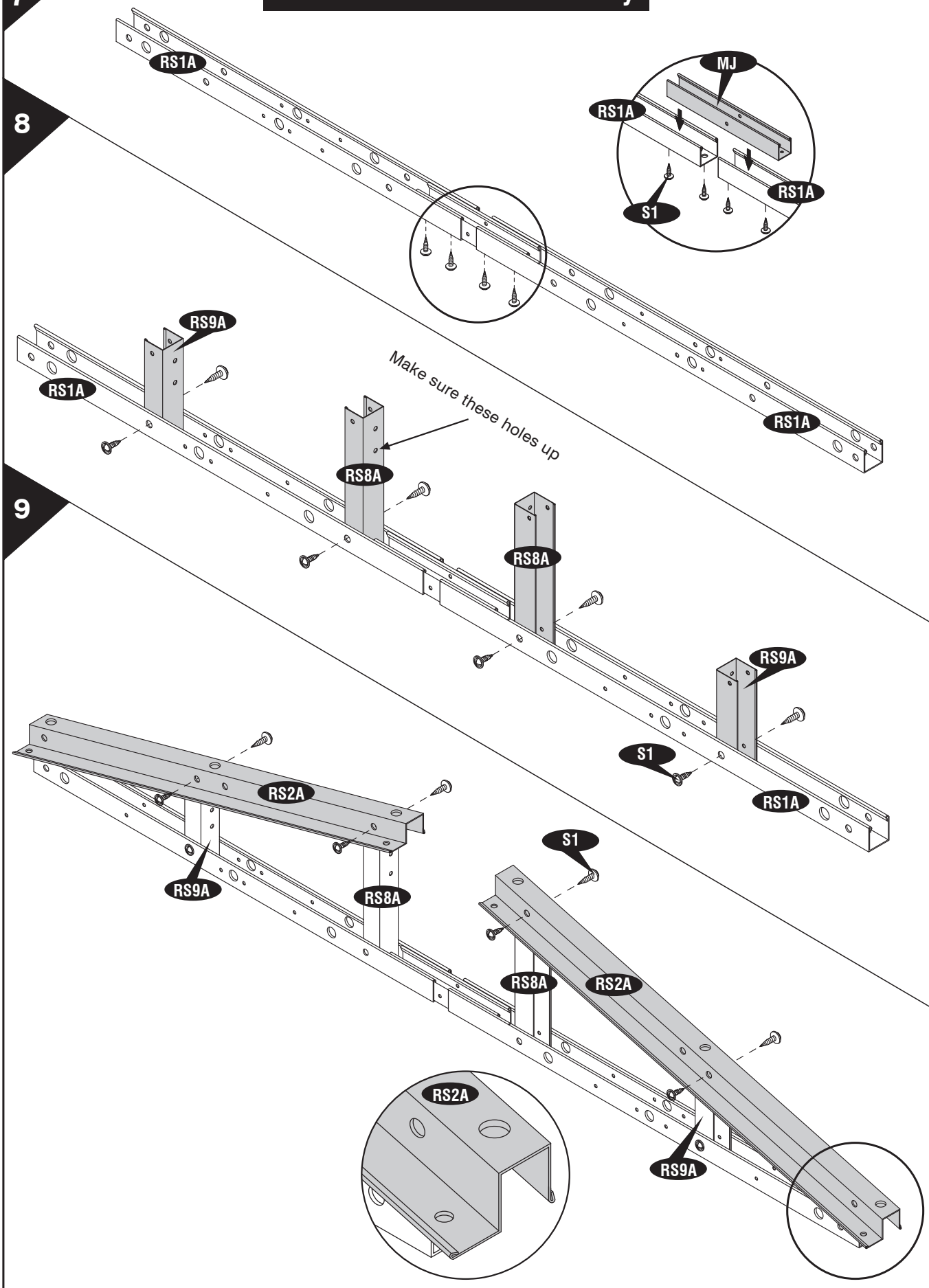

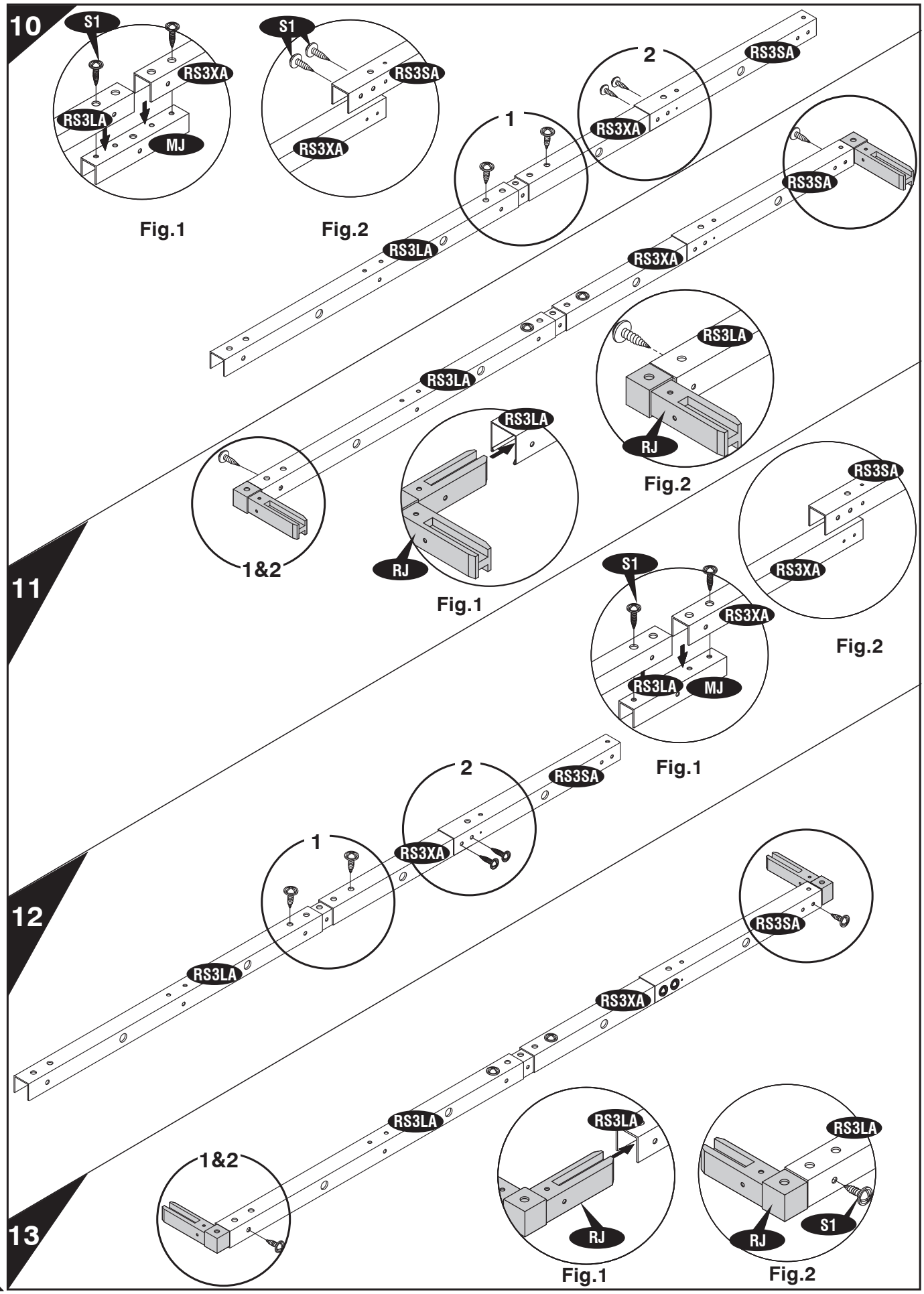
10
S1
RS3XA
RS3LA
MJ
Fig.1
S1
RS3SA
RS3XA
Fig.2
1
2
RS3SA
RS3XA
RS3LA
RS3SA
RS3XA
RS3LA
1&2
RS3LA
RJ
Fig.1
RS3LA
RJ
Fig.2
11
S1
RS3XA
RS3LA
MJ
Fig.1
RS3SA
RS3XA
Fig.2
12
2
RS3SA
1
RS3XA
RS3LA
RS3SA
RS3XA
RS3LA
1&2
13
RS3LA
RJ
Fig.1
RS3LA
S1
RJ
Fig.2

14

Note Make 2 sets.

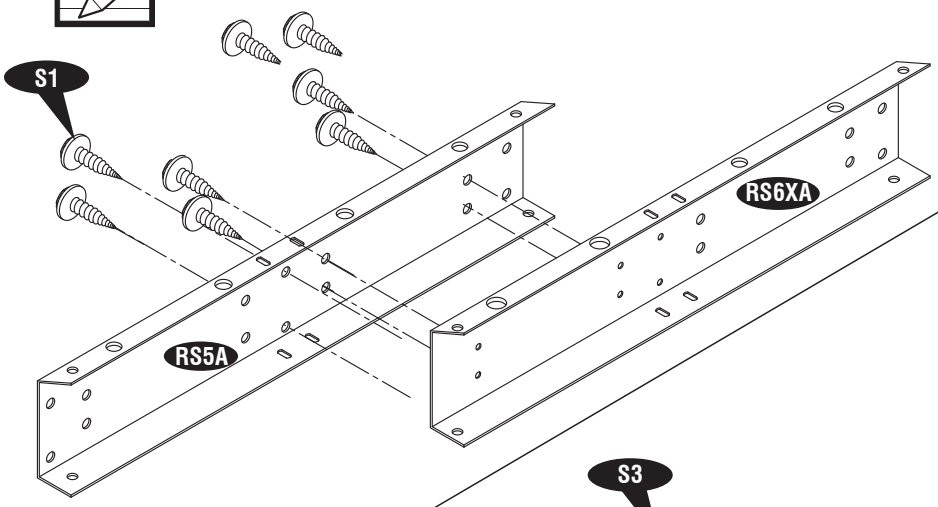

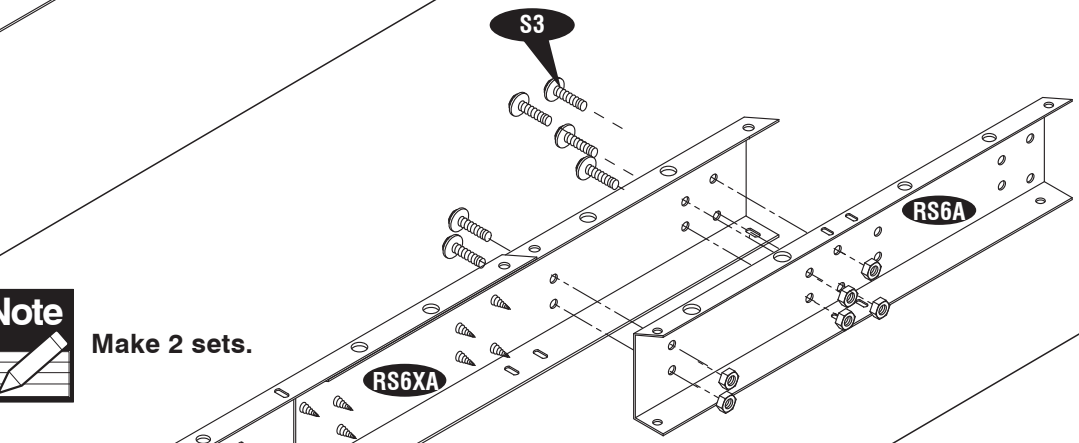

15

Note Make 2 sets.

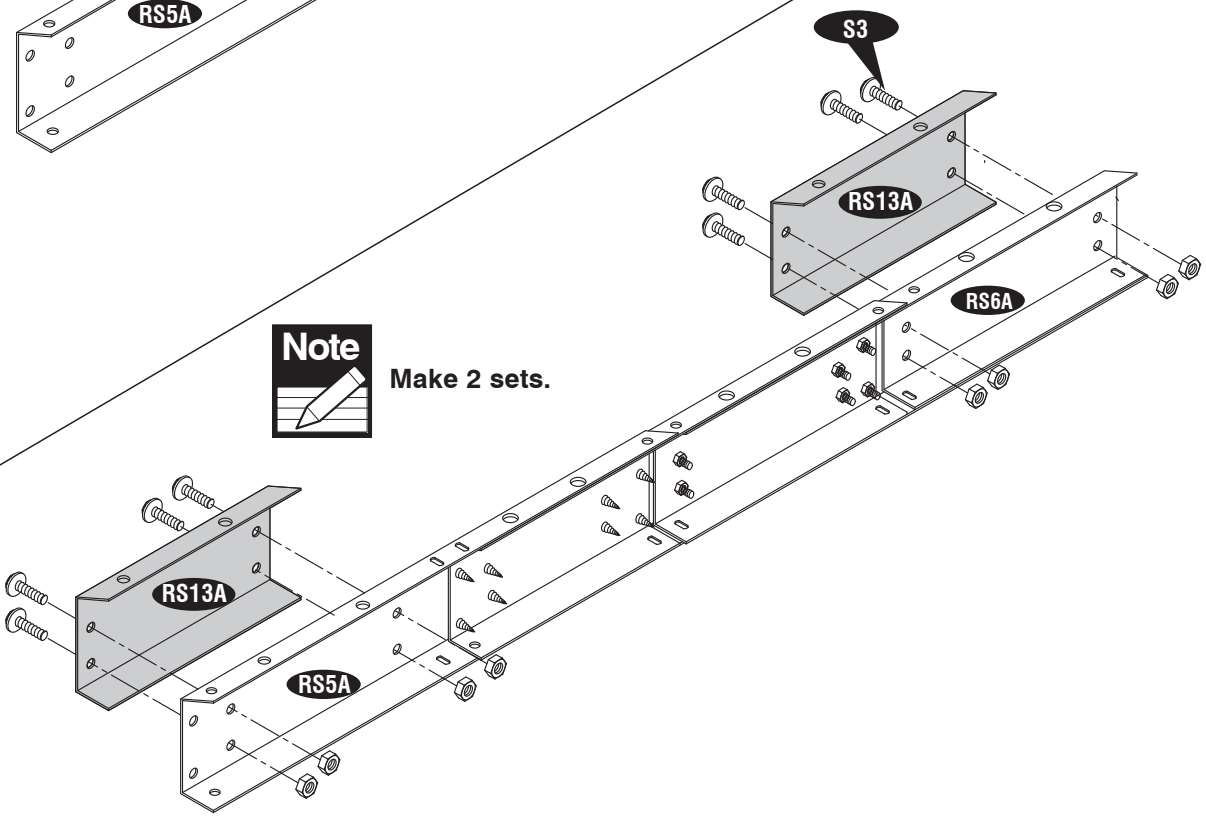

16

Note Make 2 sets.

17

Note

Make 2 sets.

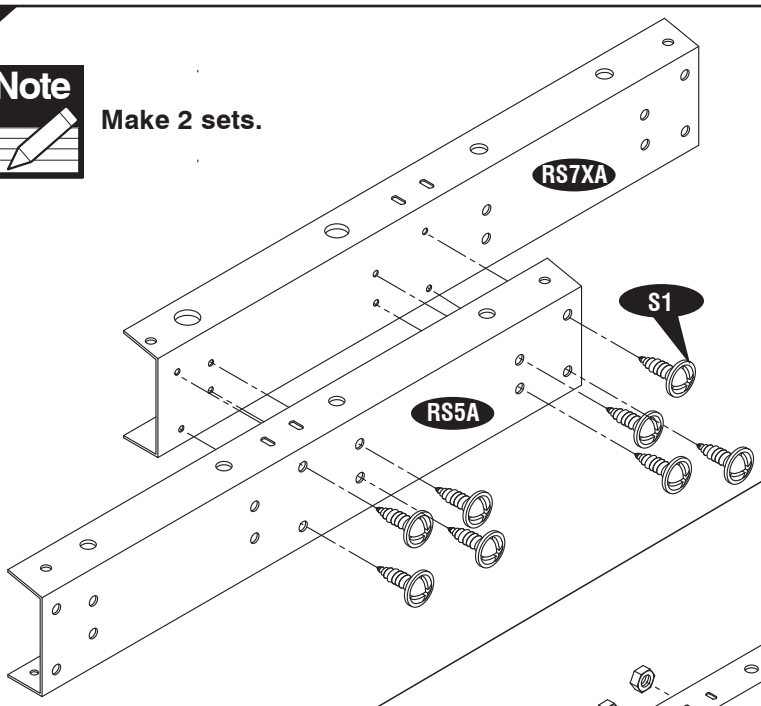

18

Note

Make 2 sets.

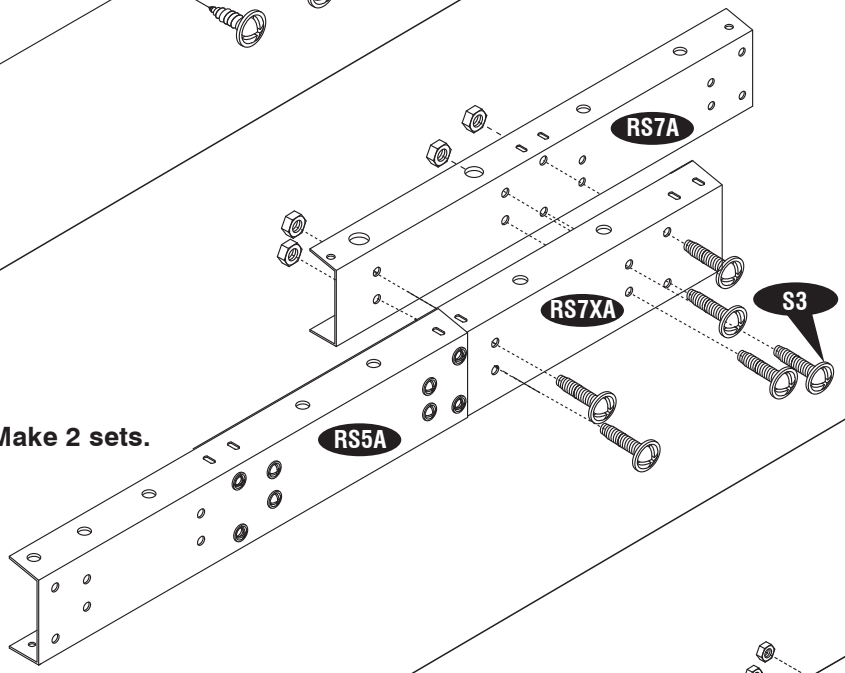

19

Note

Make 2 sets.

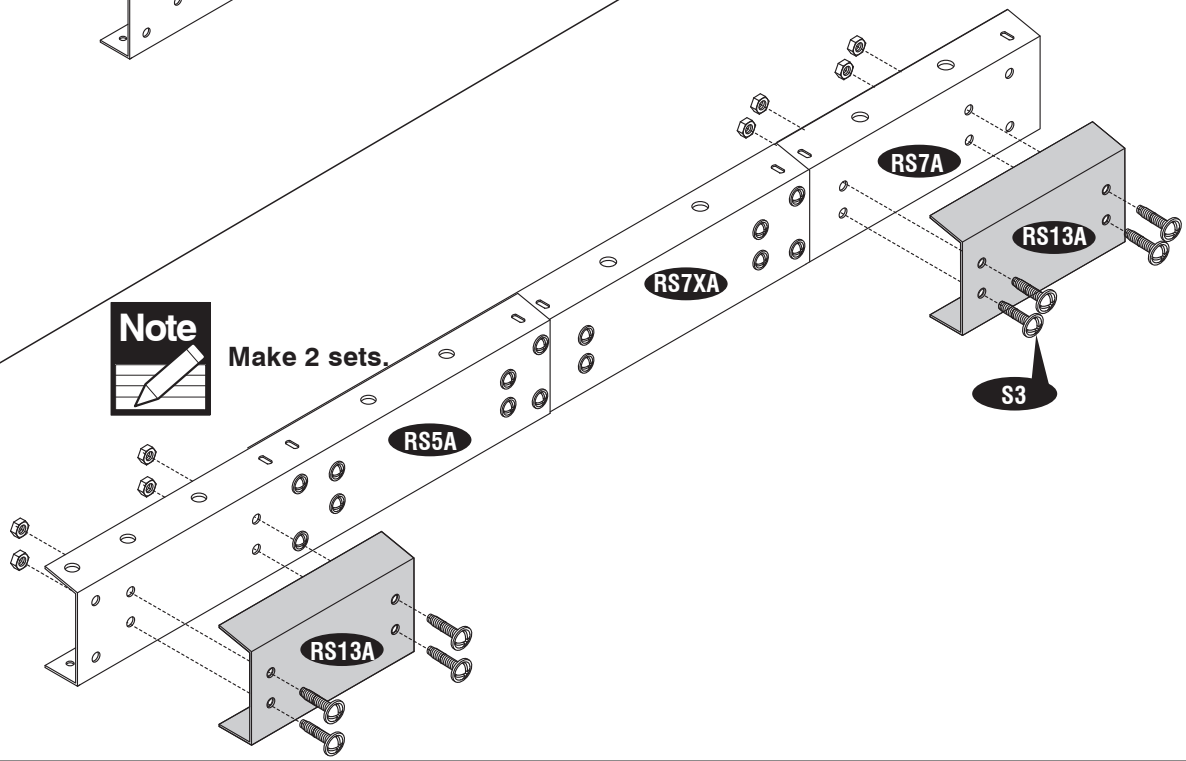

20

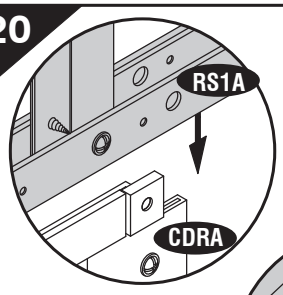

Fig.1

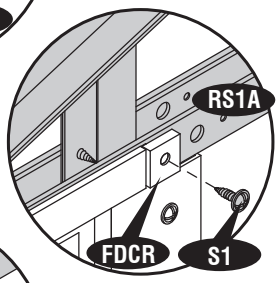

Fig.2

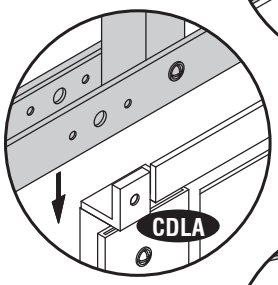

Fig.3

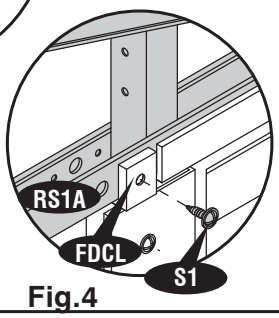

Fig.4

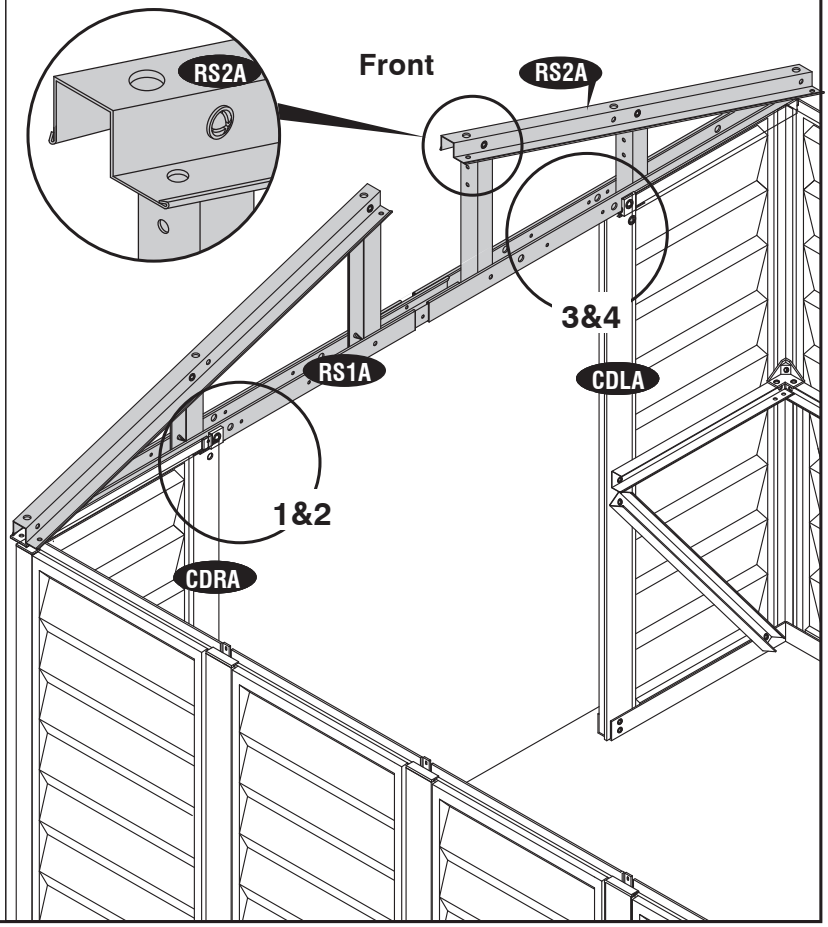

21

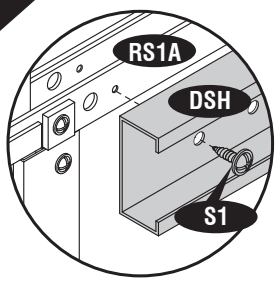

Fig.1

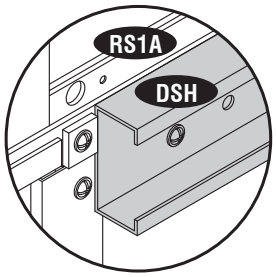

Fig.2

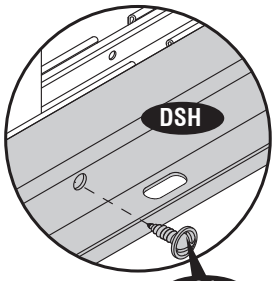

Fig.3

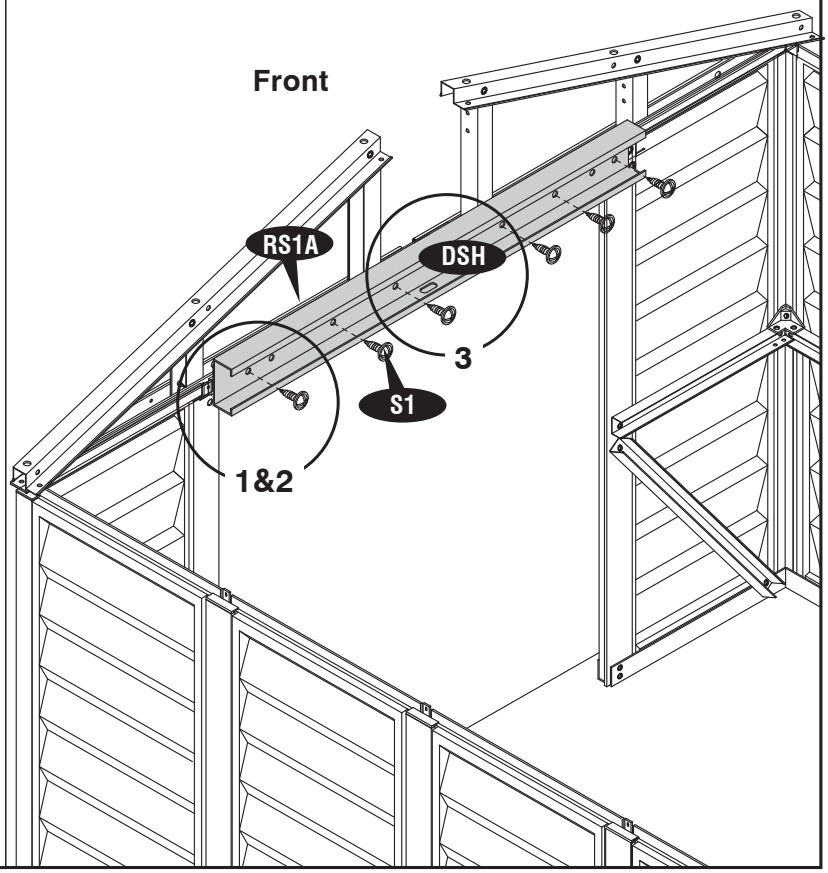

22

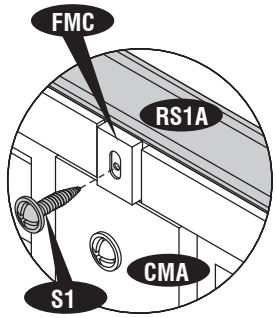

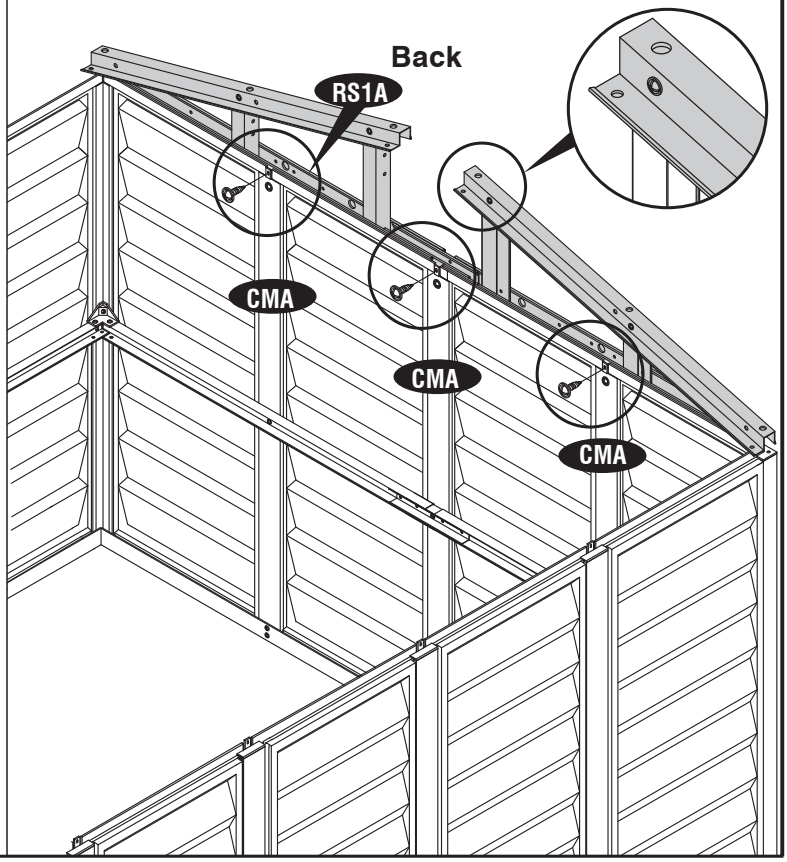

23

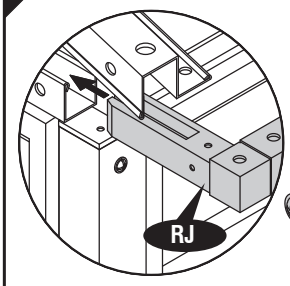

Fig.1

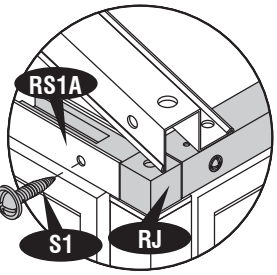

Fig.2

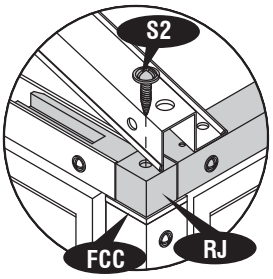

Fig.3

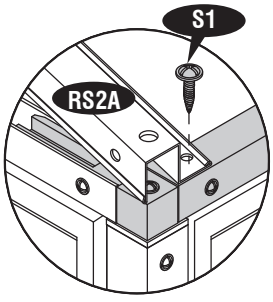

Fig.4

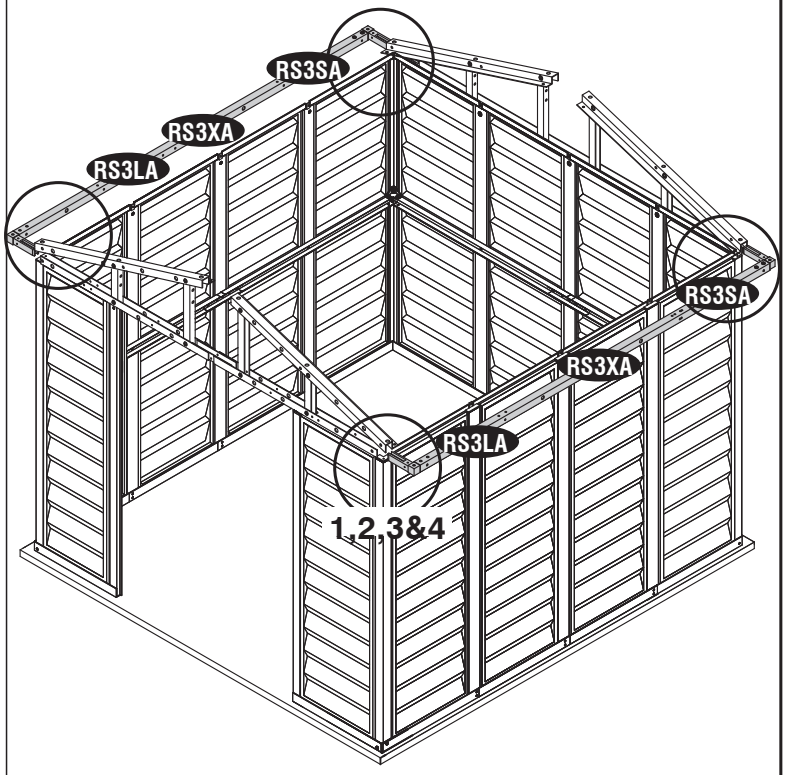

24

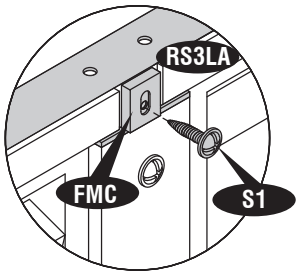

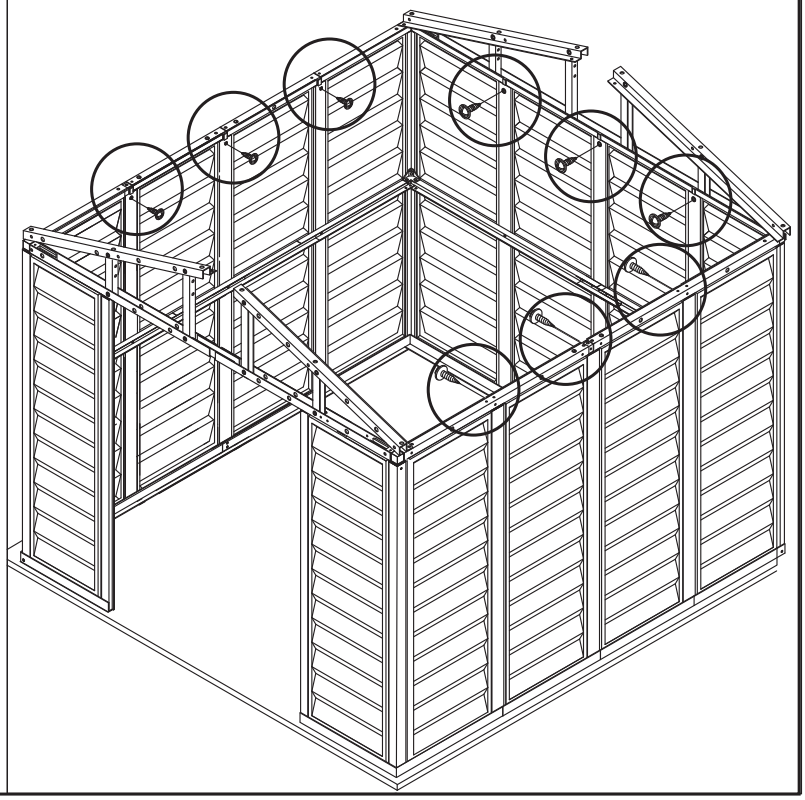

25

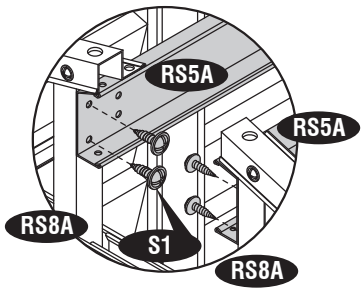

Fig.1

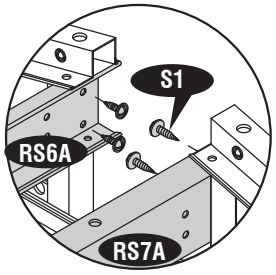

Fig.2

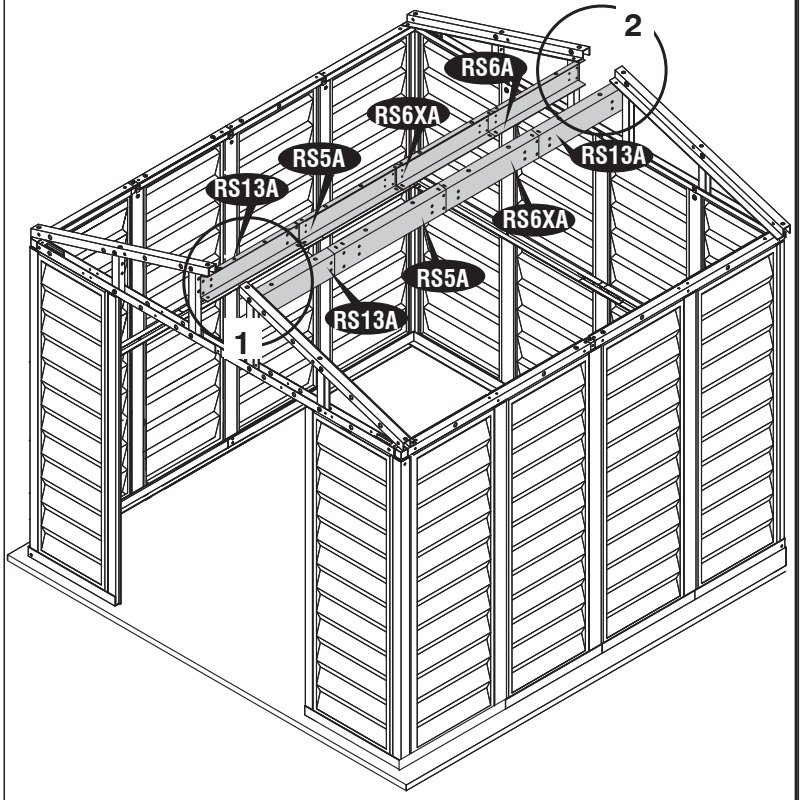

26

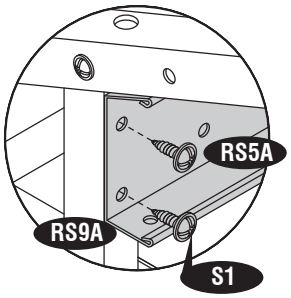

Fig.1

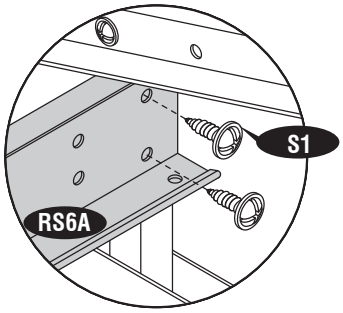

Fig.2

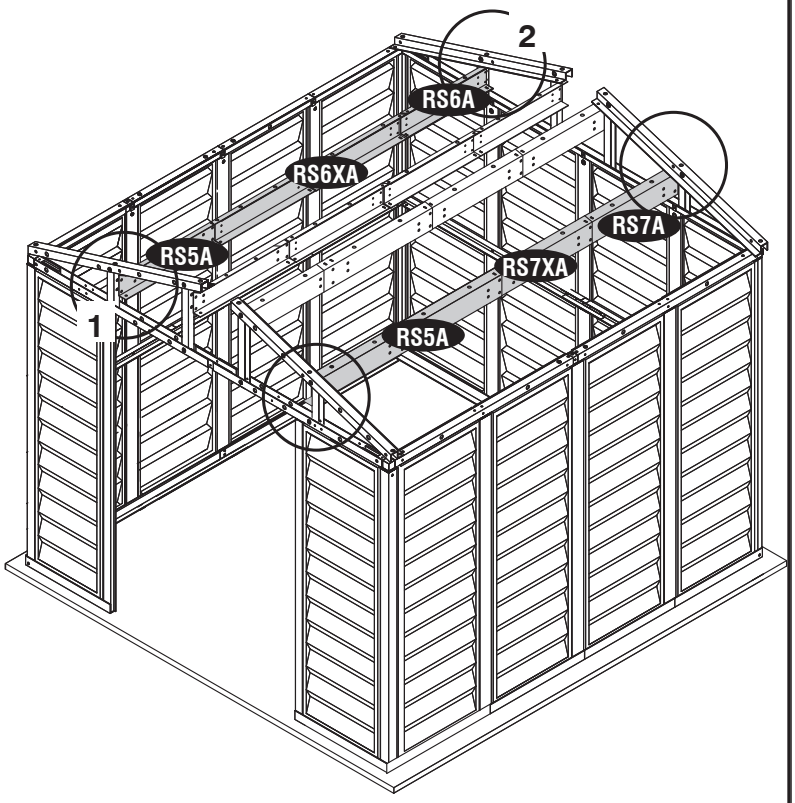

27

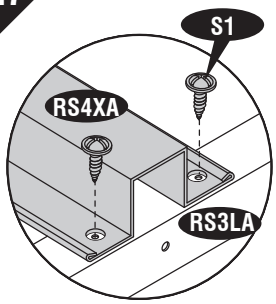

Fig.1

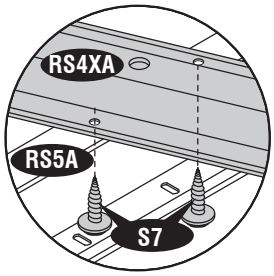

Fig.2

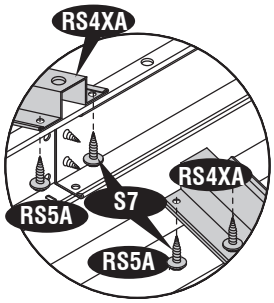

Fig.3

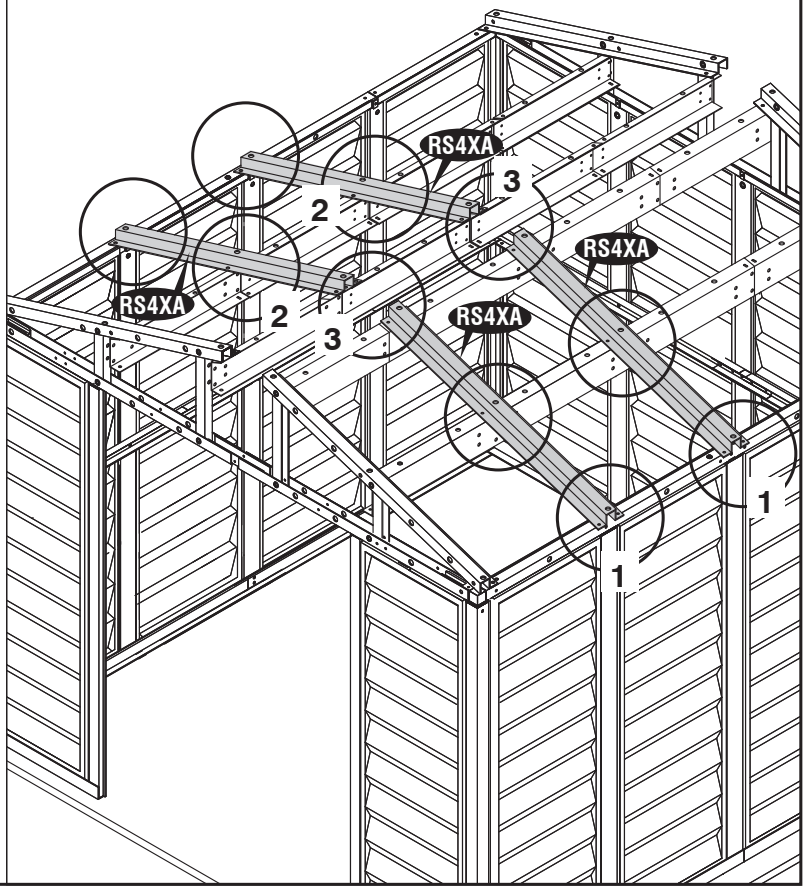

28

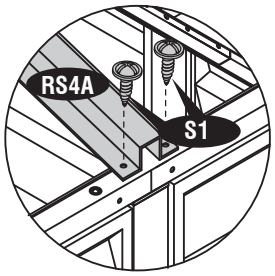

fig.1

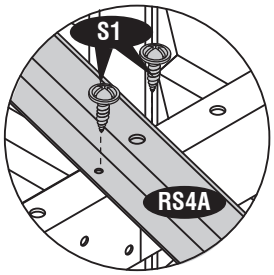

fig.2

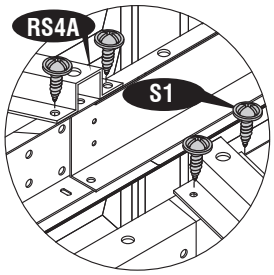

fig.3

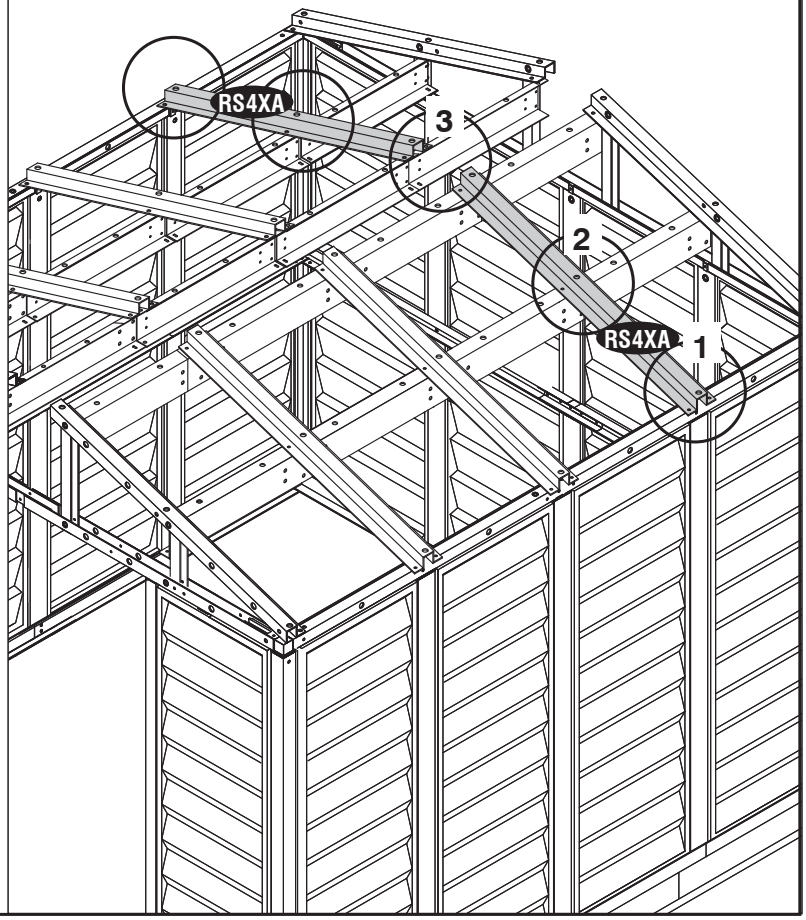

29

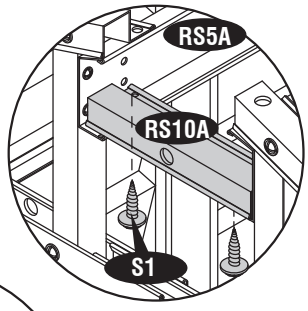

Fig.1

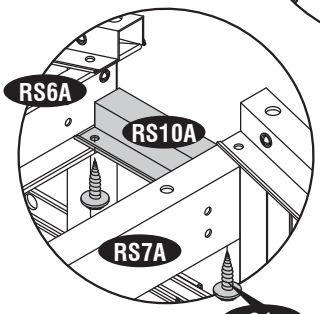

Fig.2

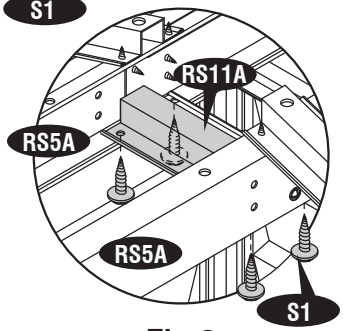

Fig.3

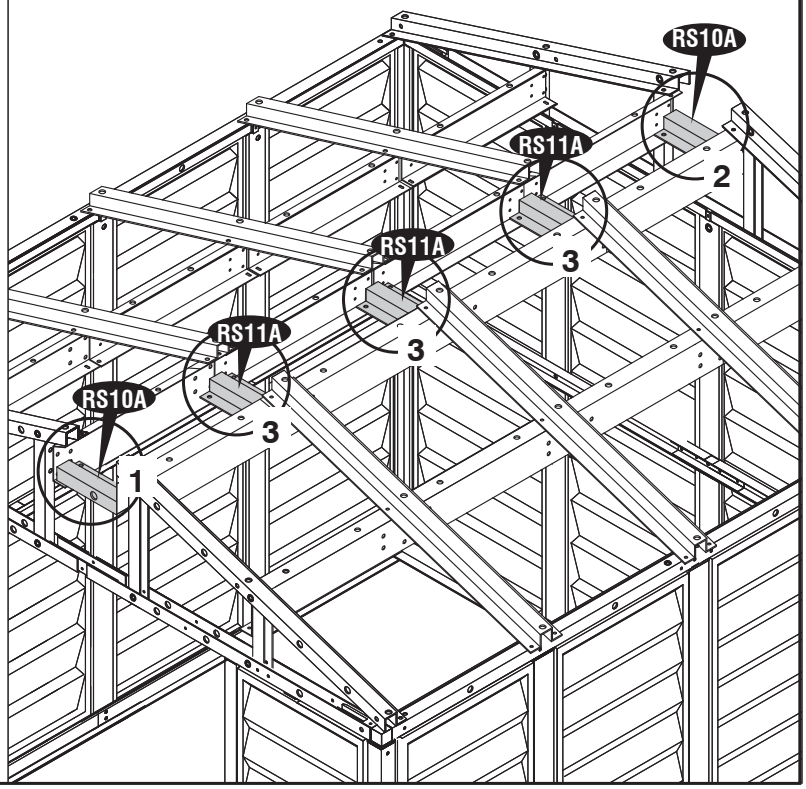

30

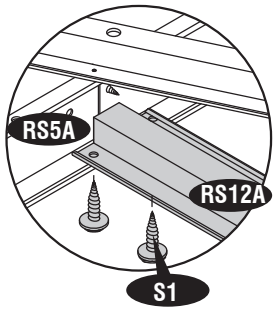

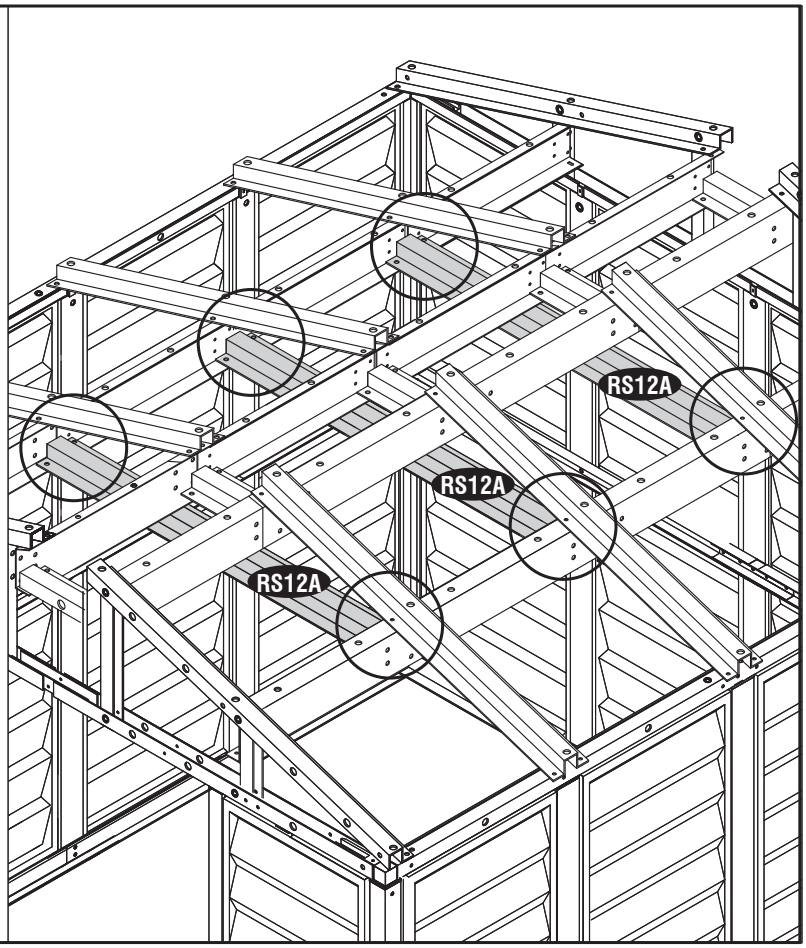

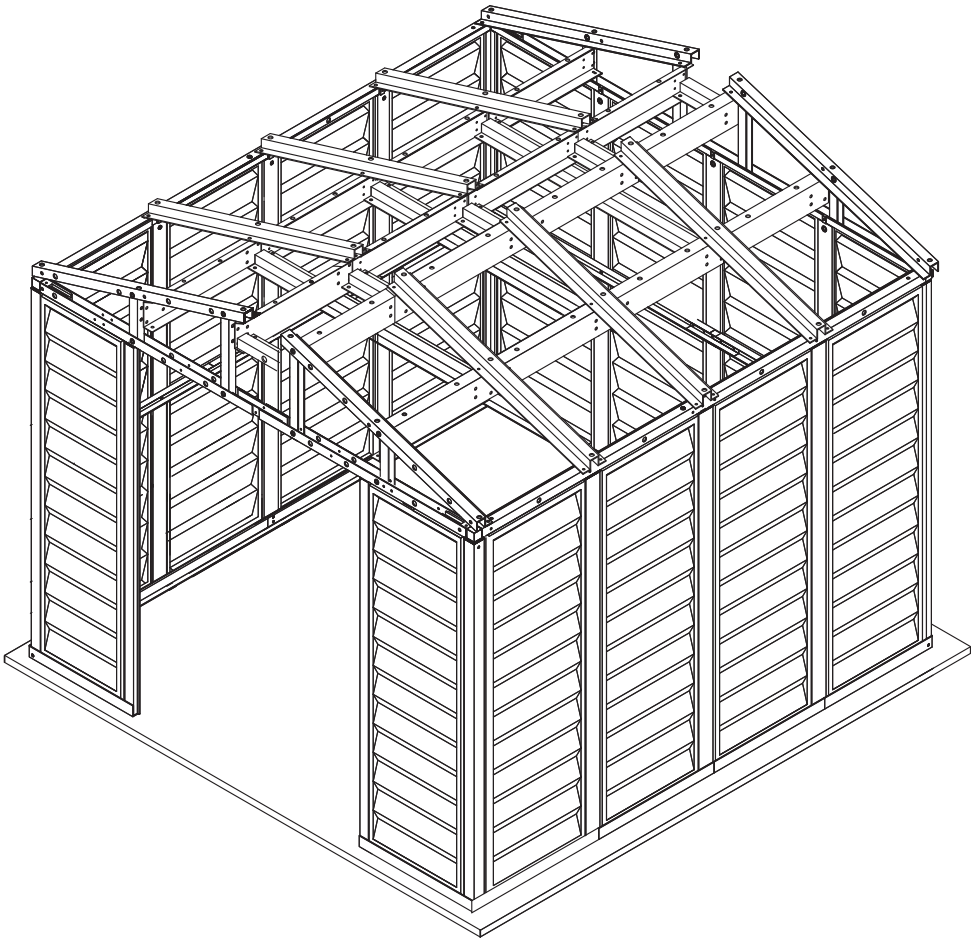

D. Roof Panels

Parts Needed:	
Code	**Qty**
RP↑	6
FPL	2
FPR	2
RRS	3
PPG	78
PIN	78
RS14A	12

Parts Needed for extension	
Code	**Qty**
RP↑	2
RRS	1
PPG	16
PIN	16
RS14A	4

Note

Insert roof plugs into Facia Panel only as indicated.

Apply silicone into the holes before inserting the pins

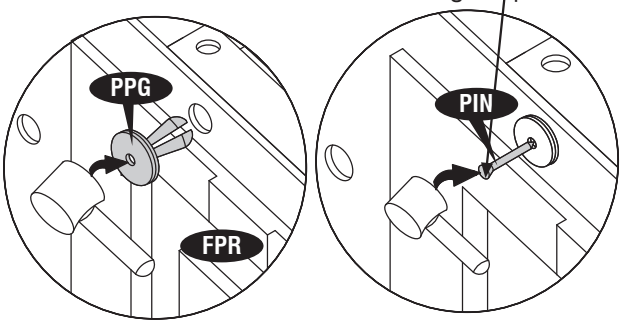

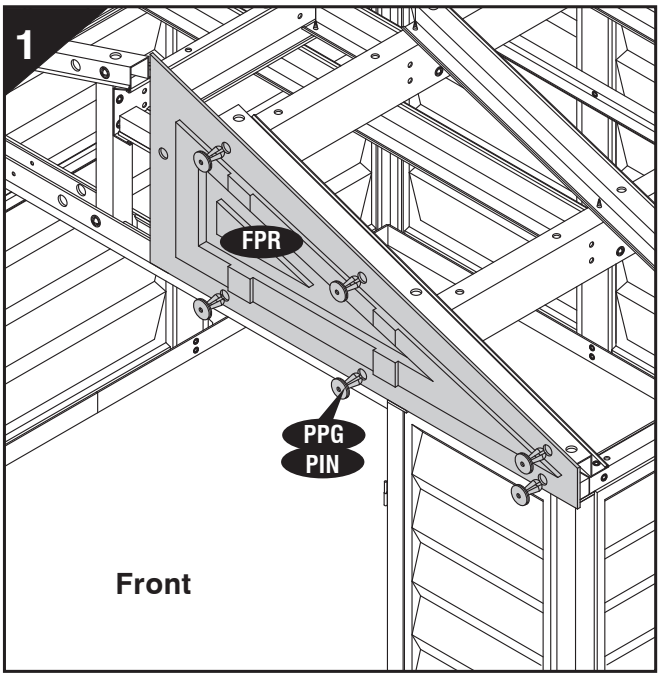

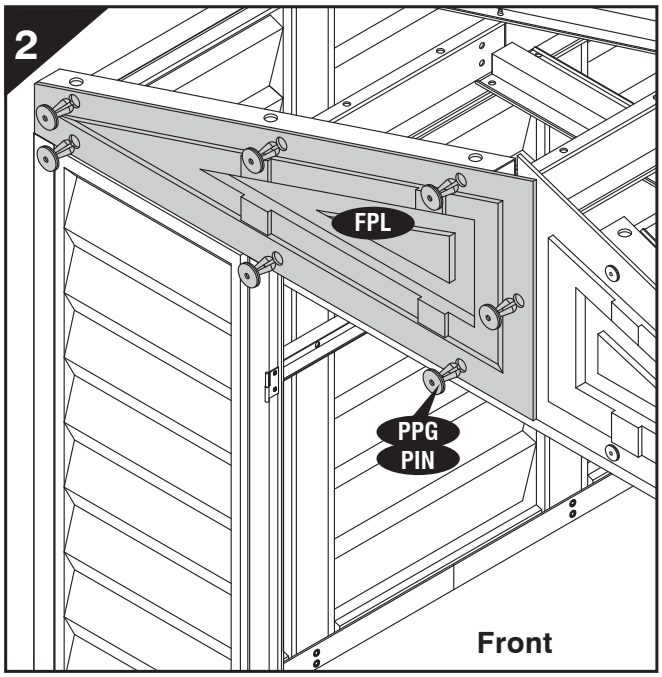

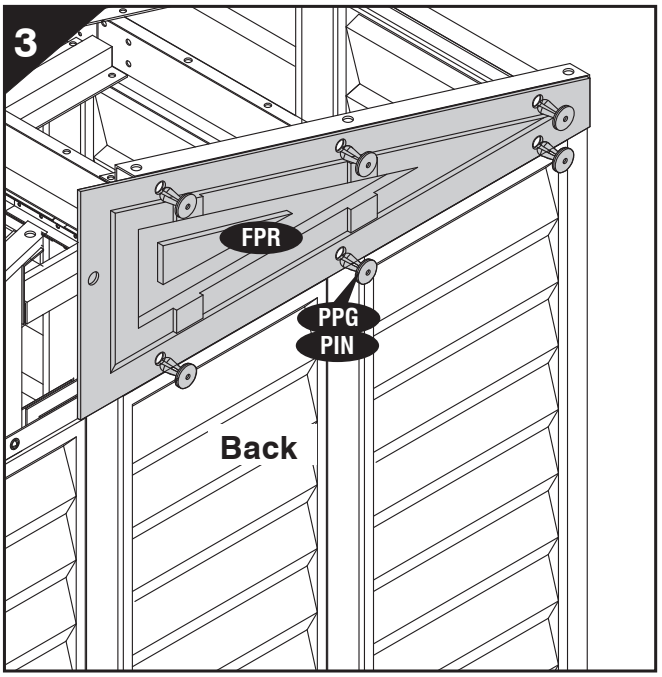

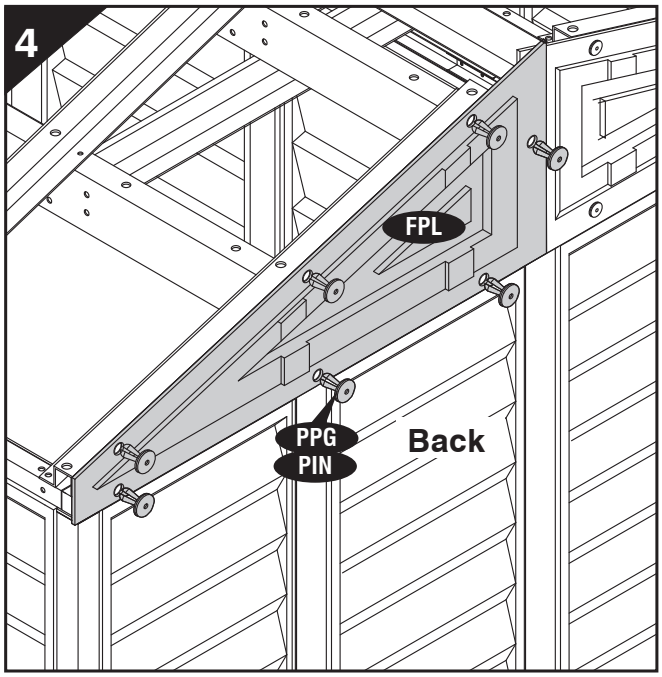

Note

Use a screw driver to align the holes.

Insert roof plugs into roof panels only as indicated.

Note

Apply silicone around the roof plugs and the pin holes before fixing the pins.

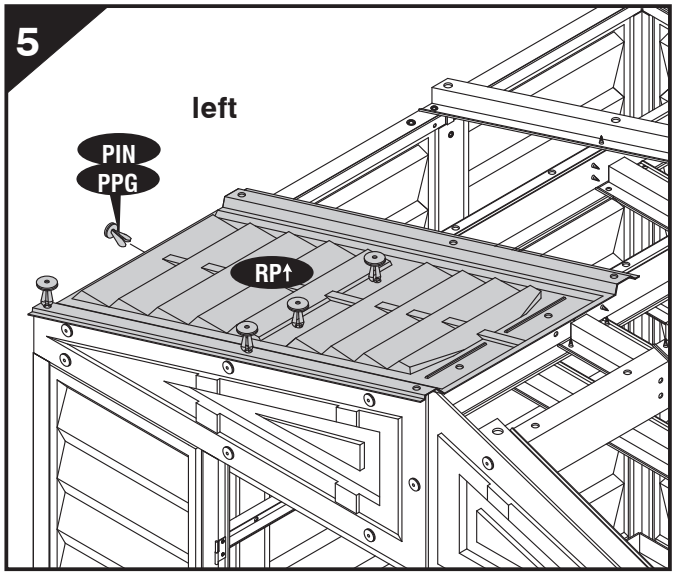

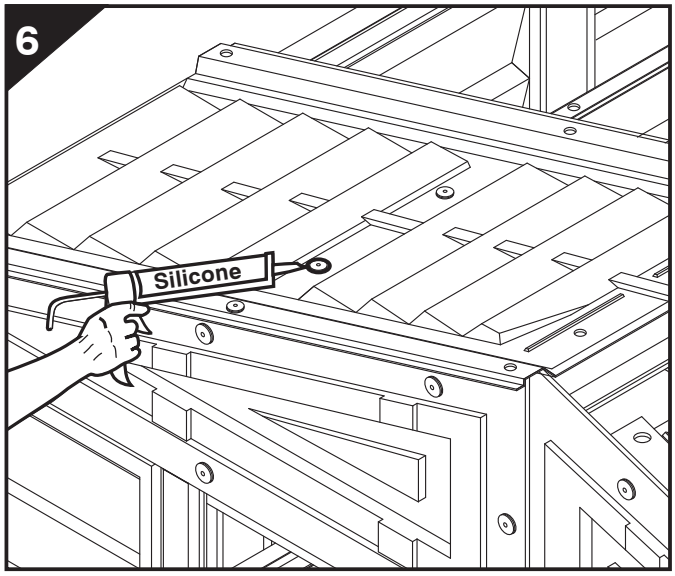

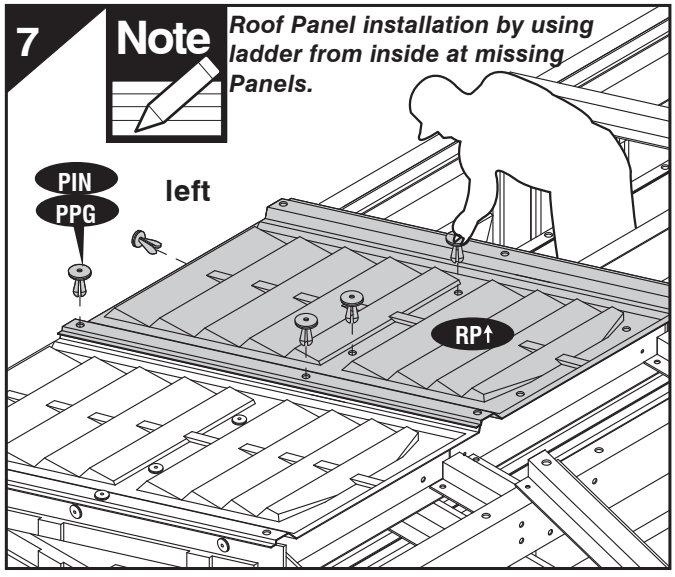

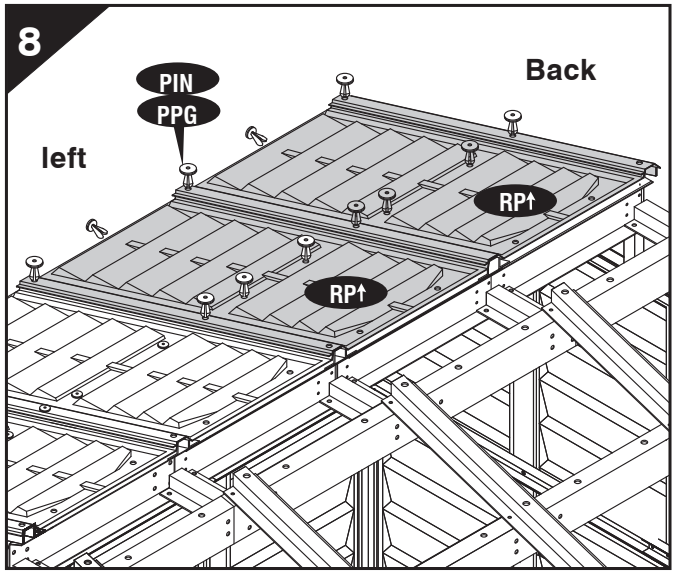

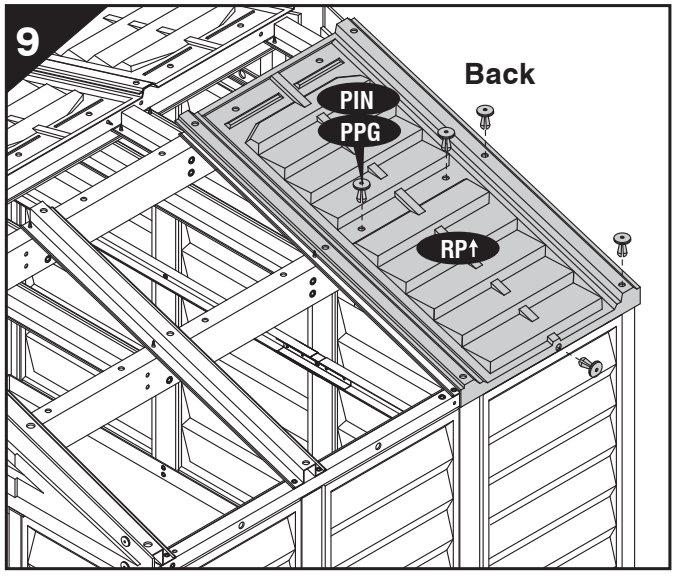

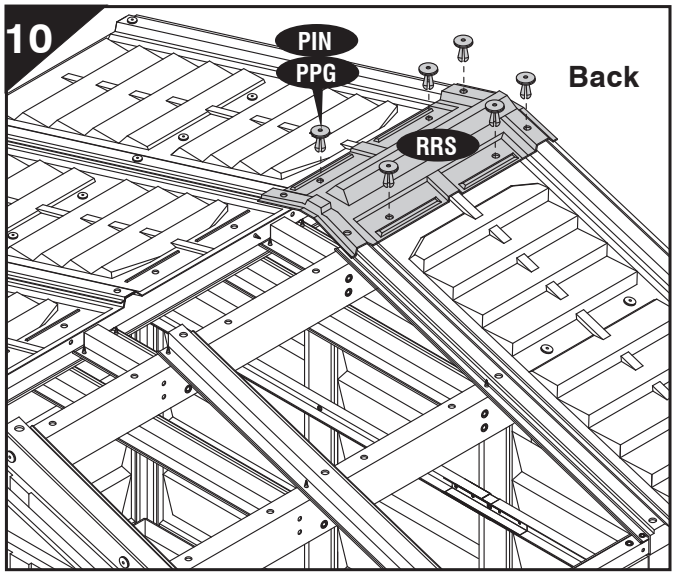

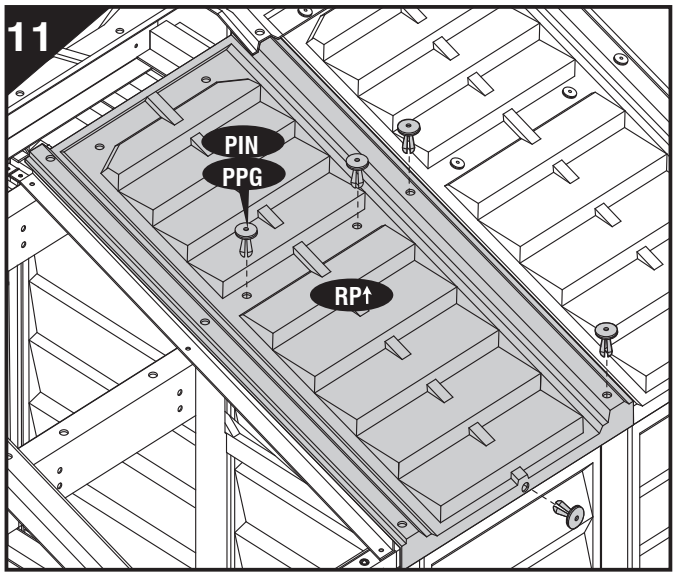
11
PIN
PPG
RP↑

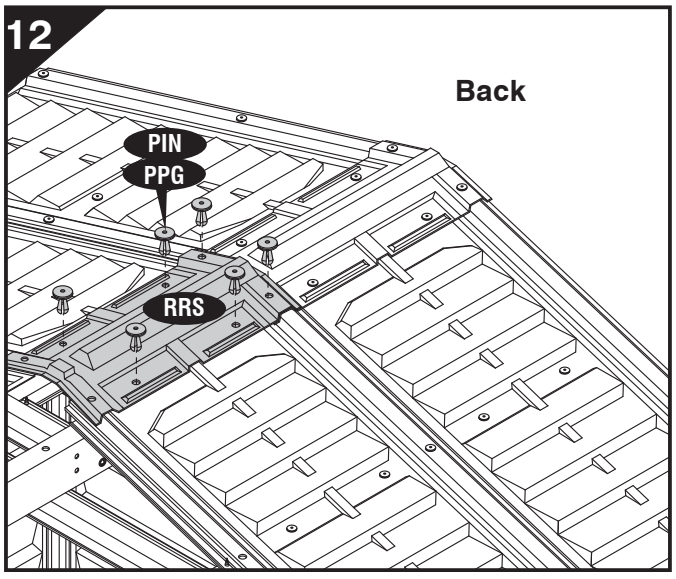
12
Back
PIN
PPG
RRS

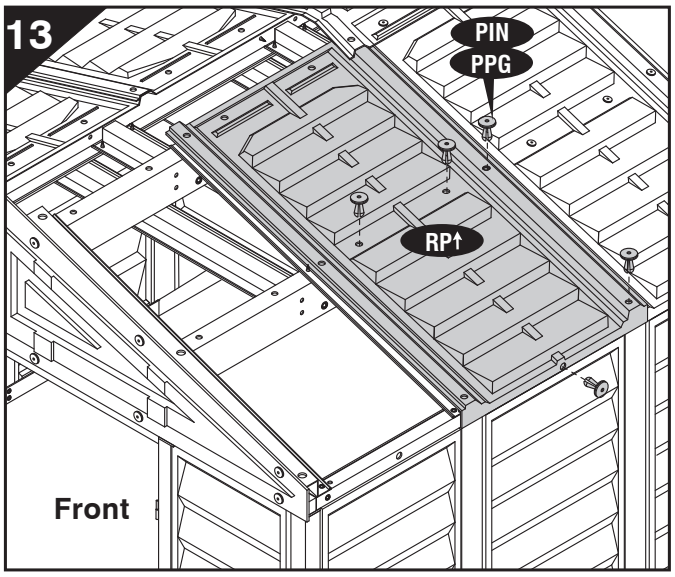
13
PIN
PPG
RP↑
Front

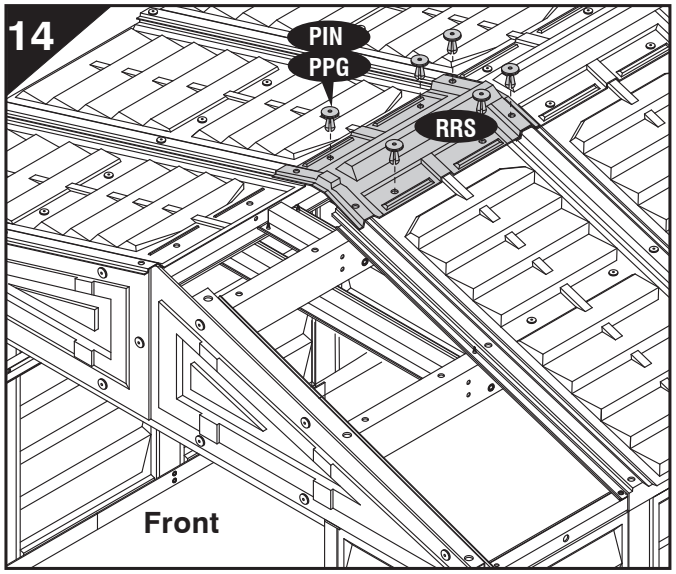
14
PIN
PPG
RRS
Front

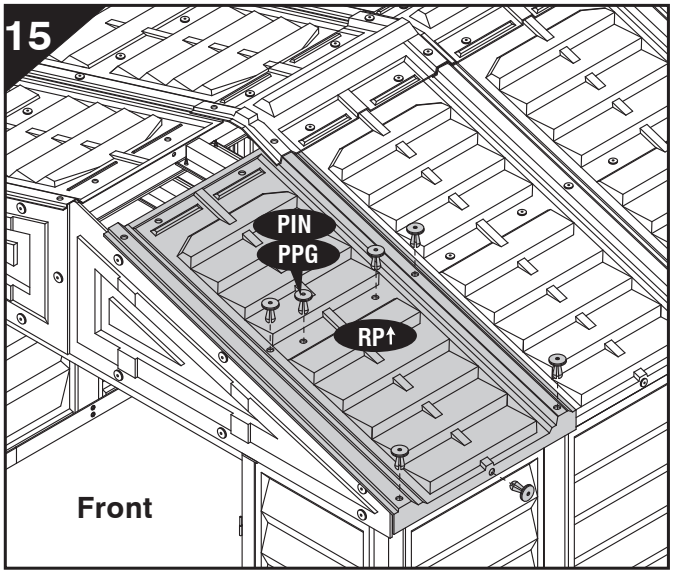
15
PIN
PPG
RP↑
Front

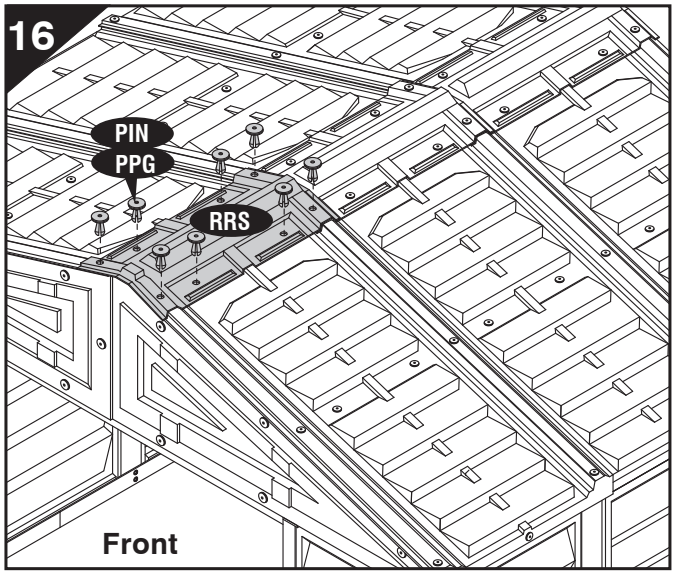
16
PIN
PPG
RRS
Front

17

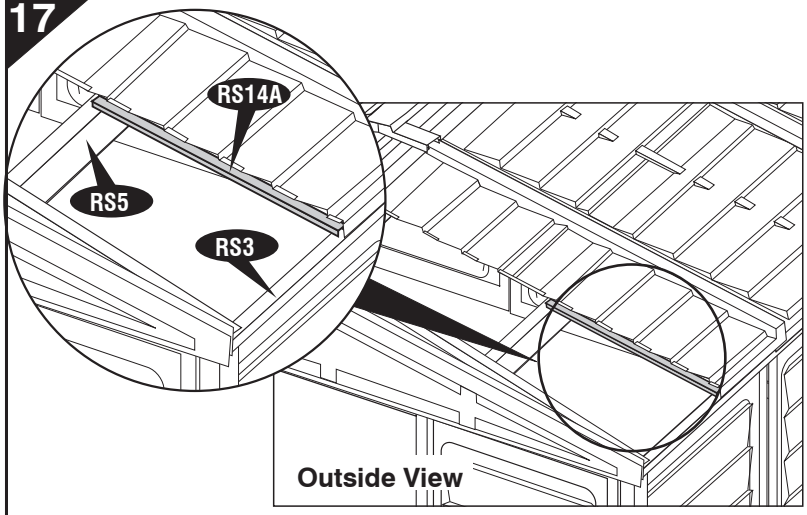

Fig. 1

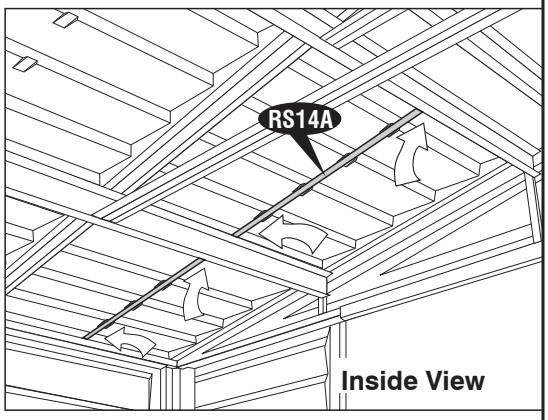

Fig. 2

E. Door

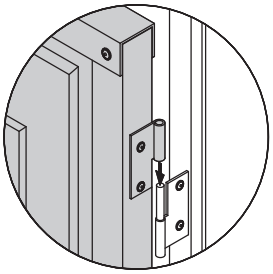

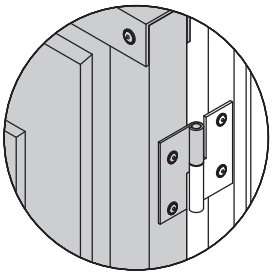

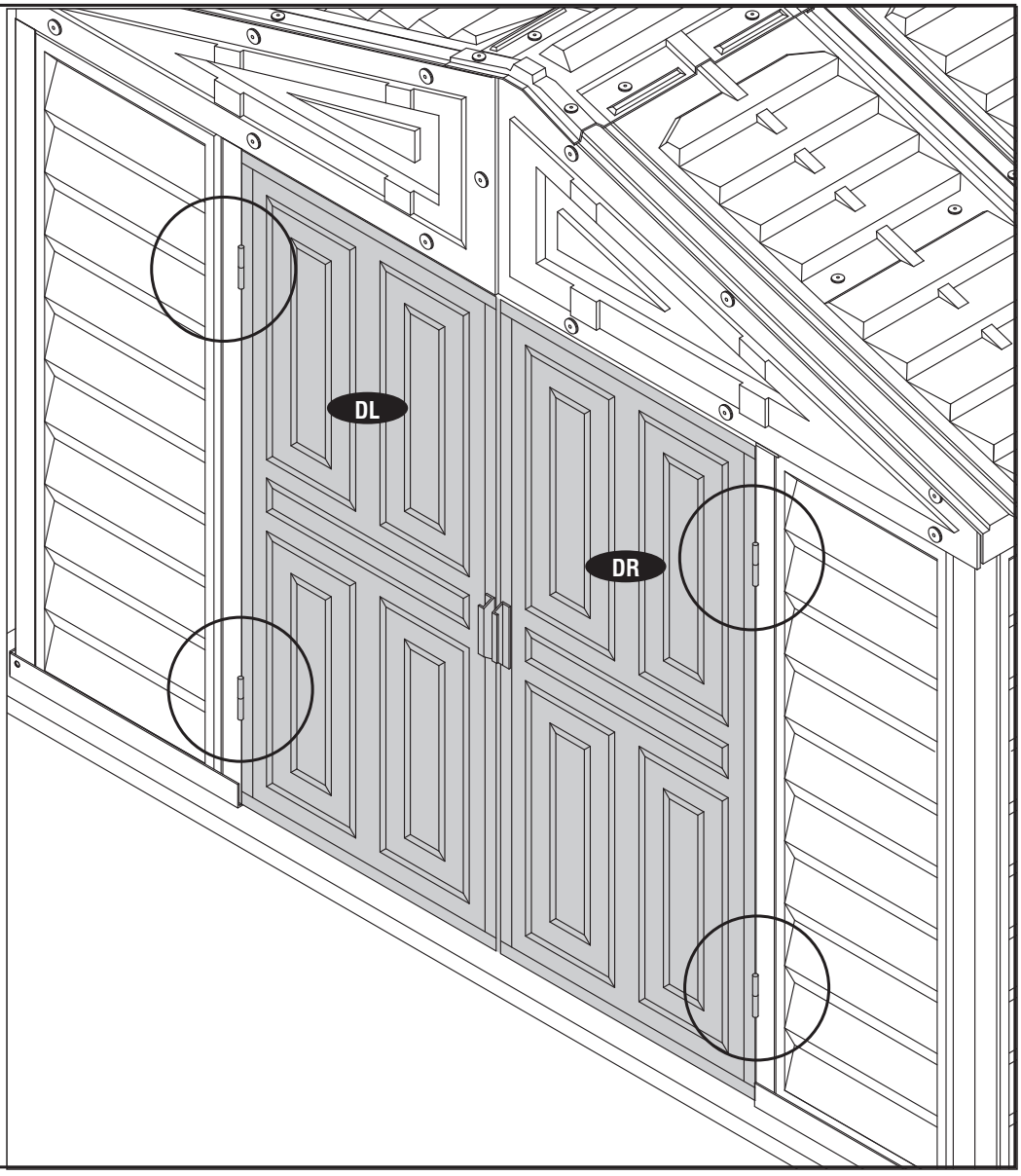

Note

Apply silicone around the perimeter of the base 'U' channel. Seal the corners, joints and base of door column. This is optional and should be done for heavy rain areas if needed.

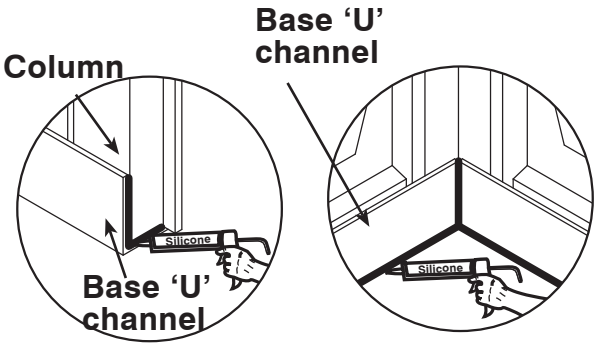

Fig.1

Fig.2

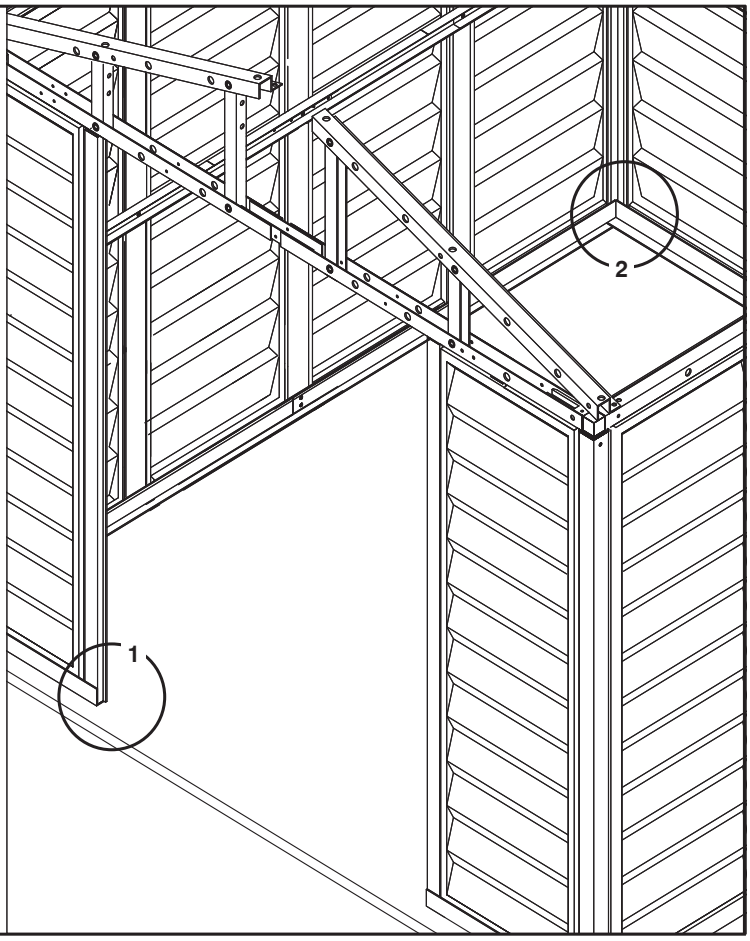

Note

After completing the panel assembly,apply silicone around the roof plugs.This is optional and sould be done for heavy rain areas if needed.

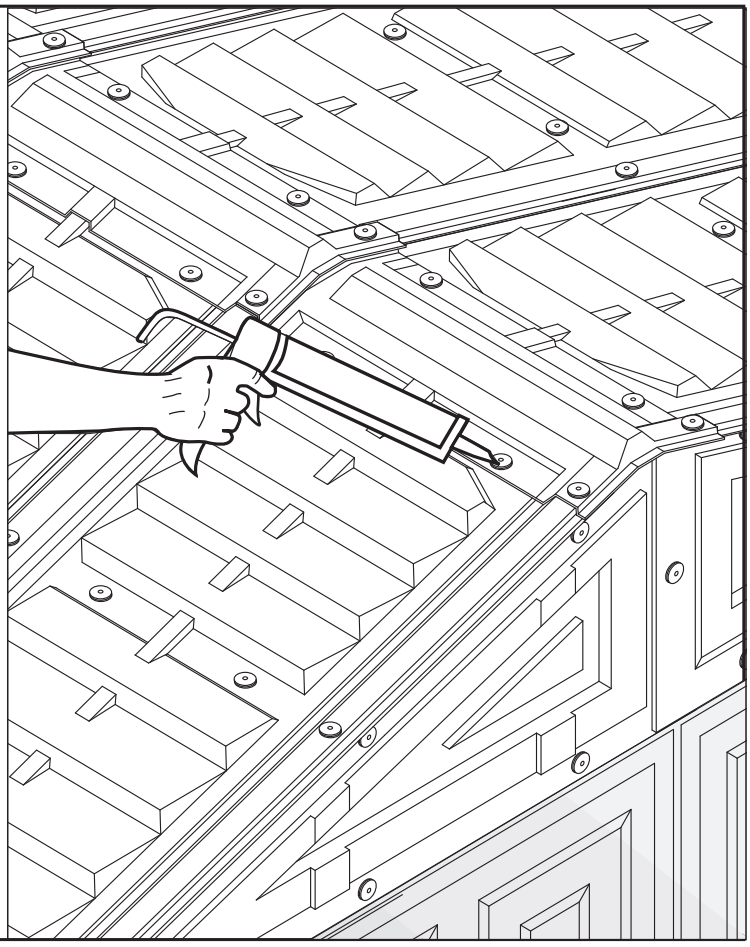

F. Ventilation Kit

Parts Needed:	
Code	**Qty**
VC	2
VCP	4

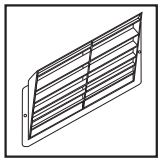

VC

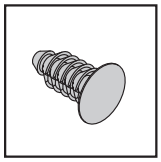

VCP

TOOLS YOU WILL NEED

Power Drill
Dia 3/16" (5mm) drill bit
Dia 1/2" (12.5mm) drill bit

Note

Optional ventilation kits can be installed on any of the wall panels. However, we recomend mounting them on the top of the shed's back wall.

1

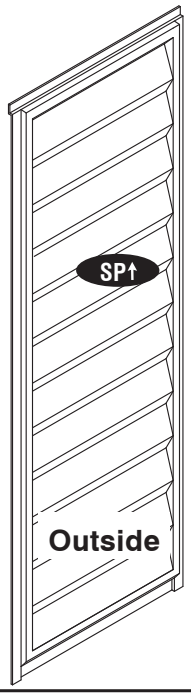

2

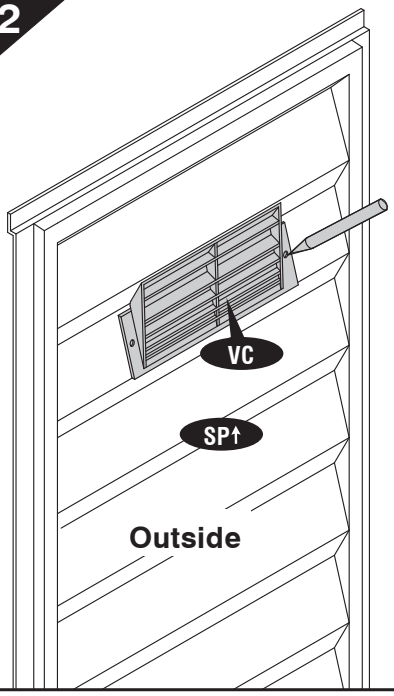

3

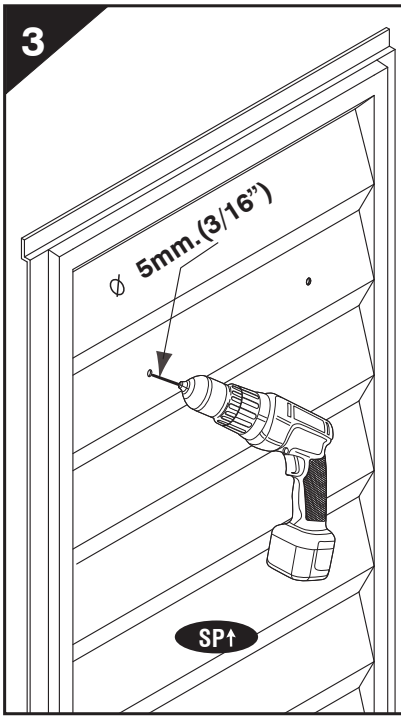

4

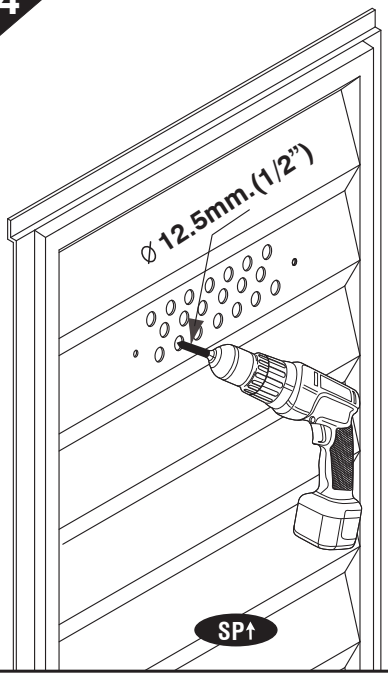

5

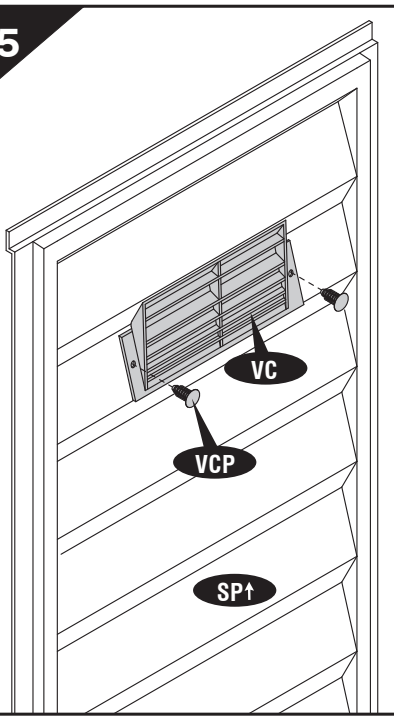

6

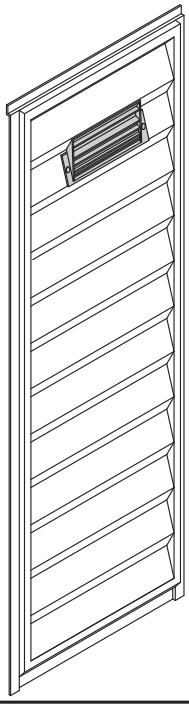

High wind area installation instructions

Note: To ensure that your shed withstands high winds, you will need the following reinforcement.

Parts needed (not included) **:**

CODE	DESCRIPTION	QTY
S4	Dia. 4.2 x 16mm. (5/32" x 5/8") Sheet Metal Screw	56
S5	M6 x 40mm. (1/4" x 1 1/2") Anchor Bolt	38

1

Assembly on concrete Foundation

Using a carpenter square, line up corners. Align base bars, mark the concrete at the holes in the base and drill concrete with suitable concrete bit to accept 1/4" x 1 1/2" (M6 x 40mm) anchor bolts.
(Qty - 38 Nos. not provided).

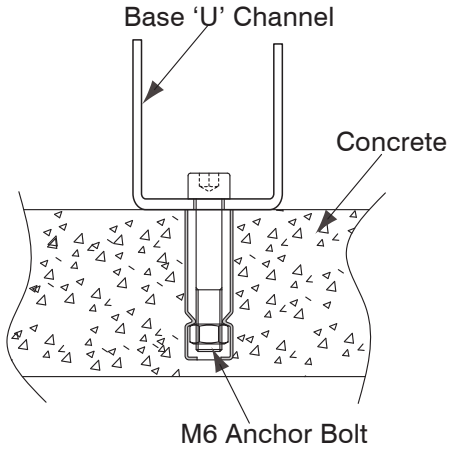

2

Attach each side panel **(SP↑)** on the bottom to the Base U-channel. Using a dia. 3mm (1/8") drill with a power drill, make two equal distance holes on the Base U-channel through the Side Panel. Drive a self tapping screw **(S4)** through the Base U-channel to the Side Panel.
Repeat this for every Side Panel. See blowup.

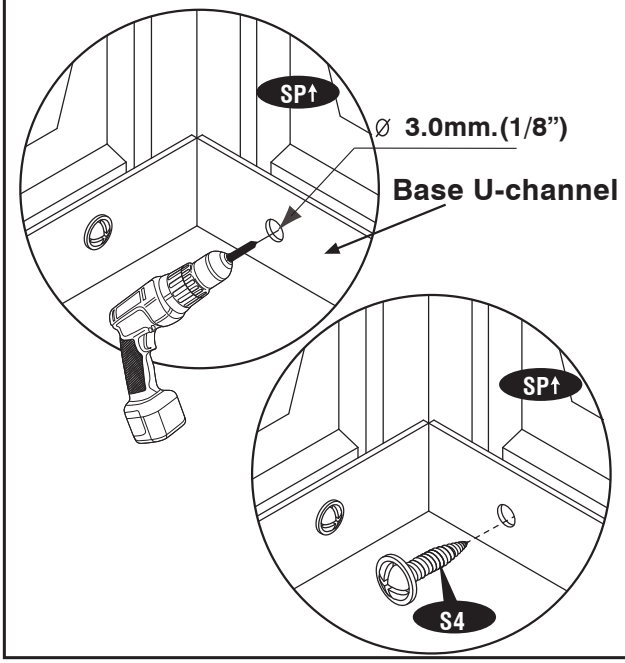

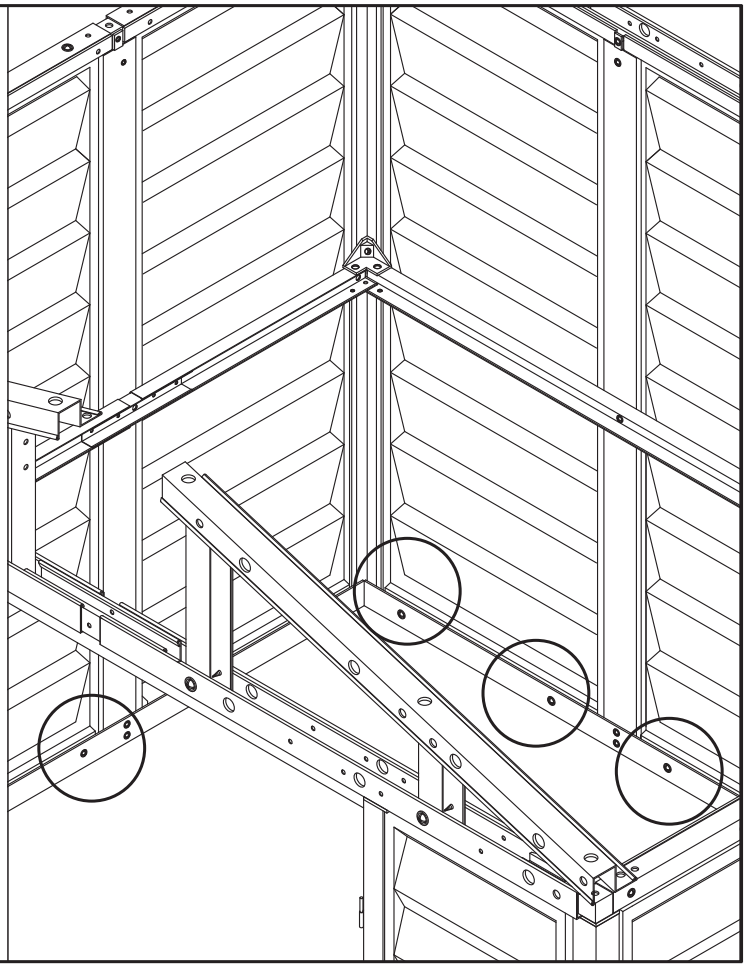

3

Attach each Side Panel **(SP↟)** on top to the Roof Structure **(RS1A, RS3LA & RS3XA,RS3SA).** Using a dia. 3mm (1/8") drill with a power drill, make two equal distance holes on the Side Panel through the Roof Structure. Drive a self tapping screw **(S4)** through the Side Panel to the Roof Structure.
Repeat this for every Side Panel. See blowup.

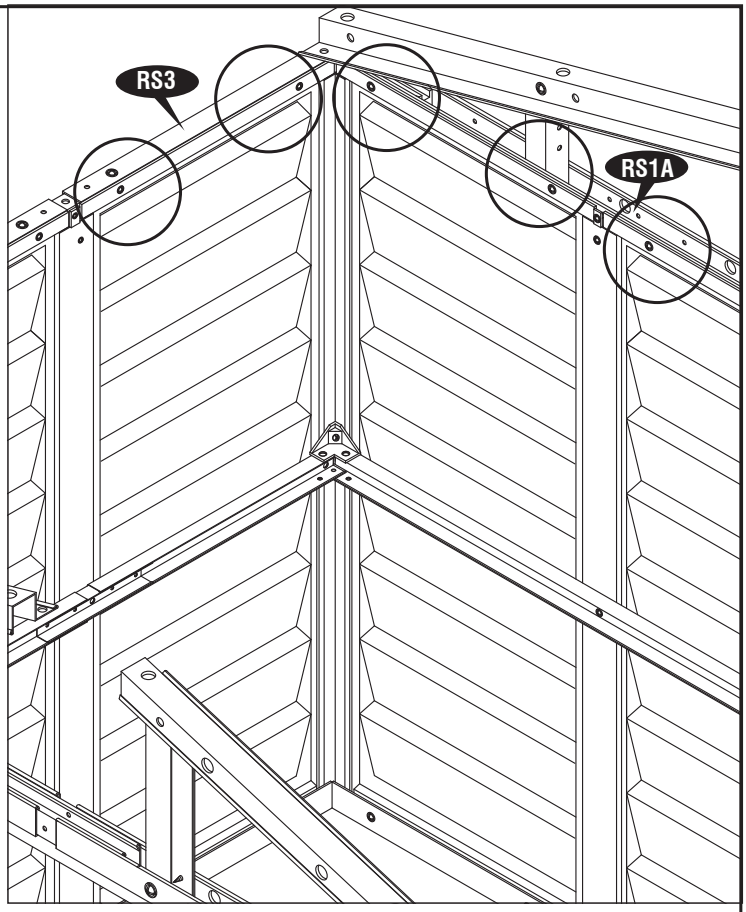

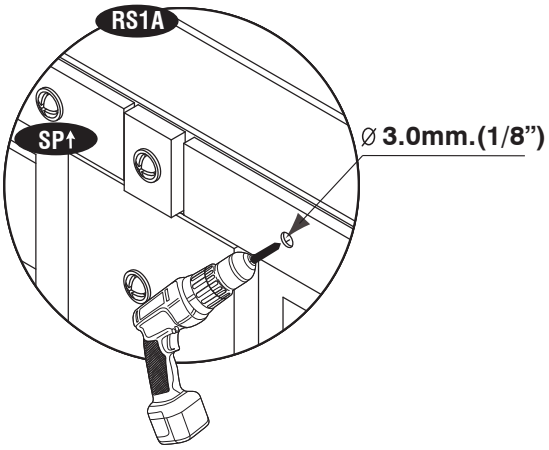

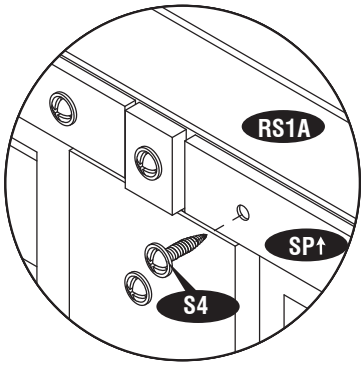

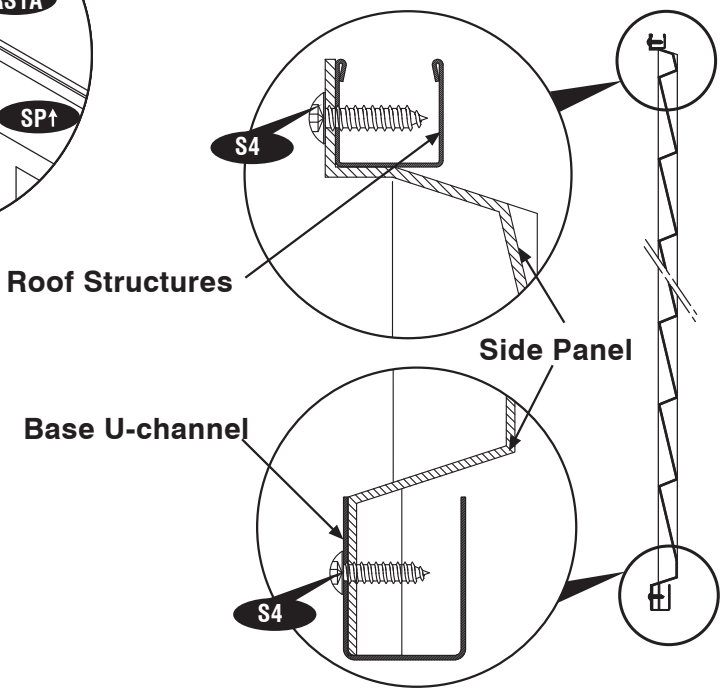

Important Warranty Information

The 'DURAMAX' shed has been tested and passed wind loads of up to 115 mph in a controlled laboratory environment. Natural high wind areas create wind at unpredictable speeds that are very difficult to capture accurately by location. As such we cannot guarantee the performance of the shed in these extreme situations.

"We recommend to clear snow from the Roof top after each Snowfall."

Part 2:Adding extension kit to existing shed

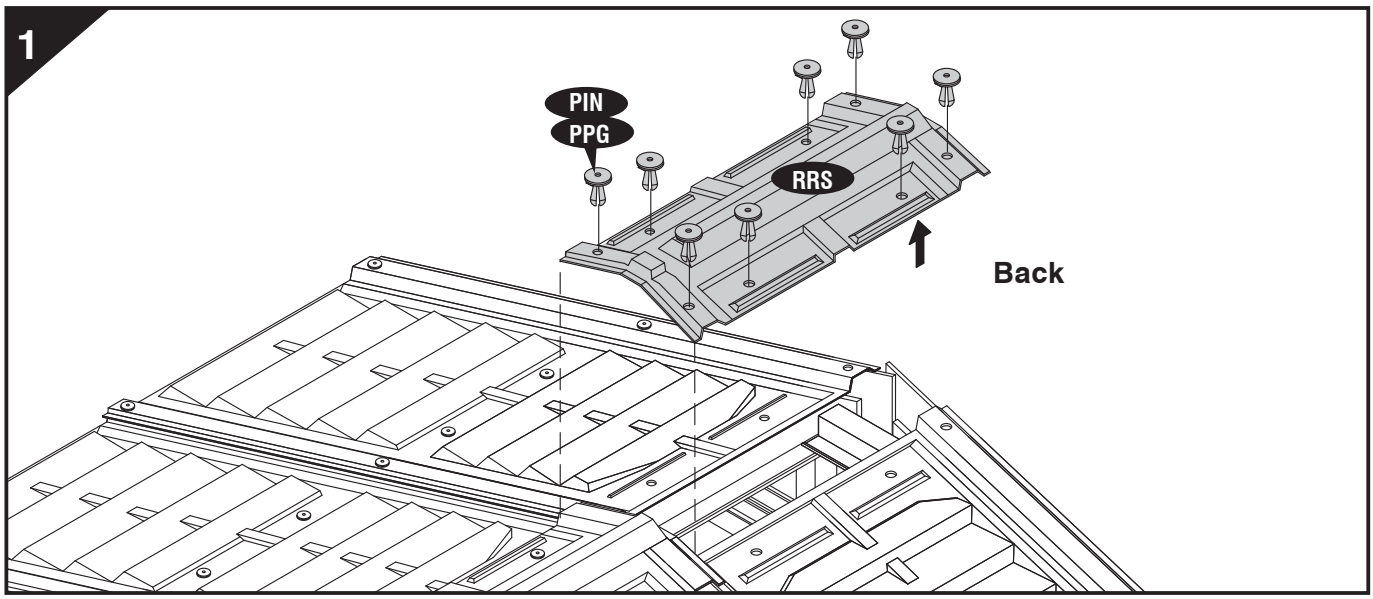

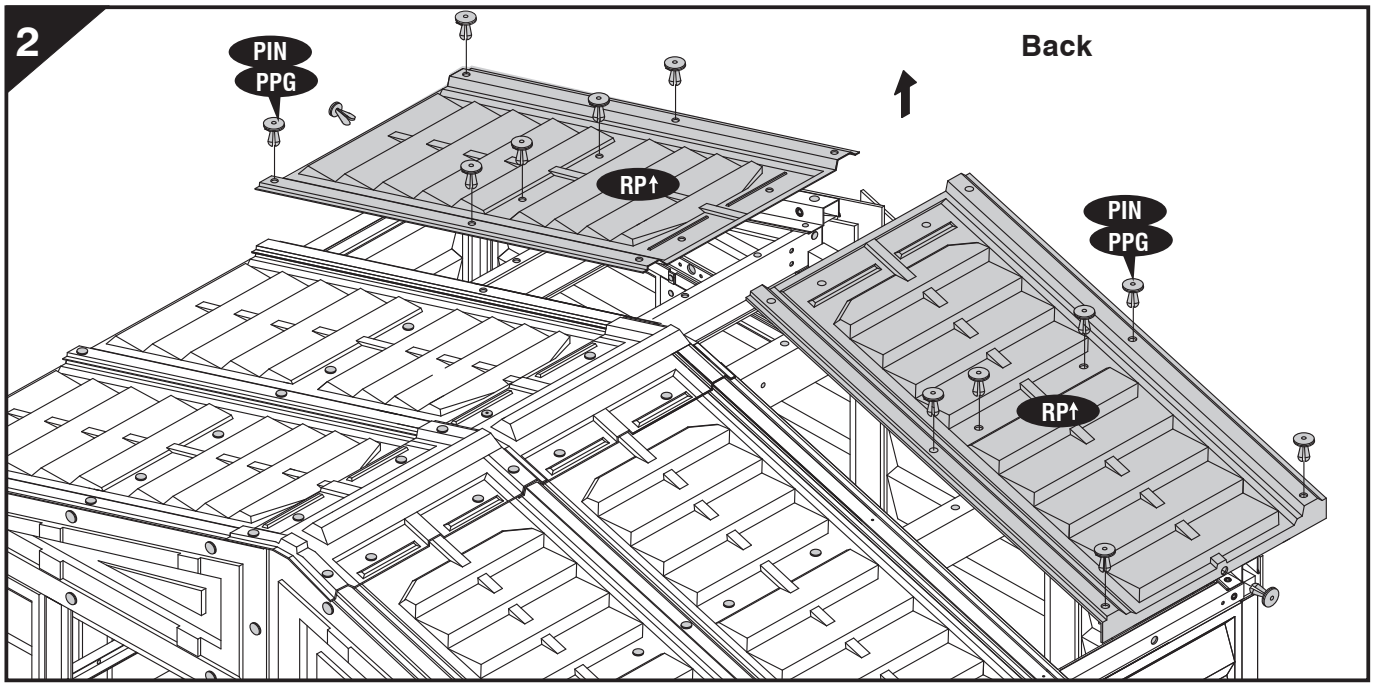

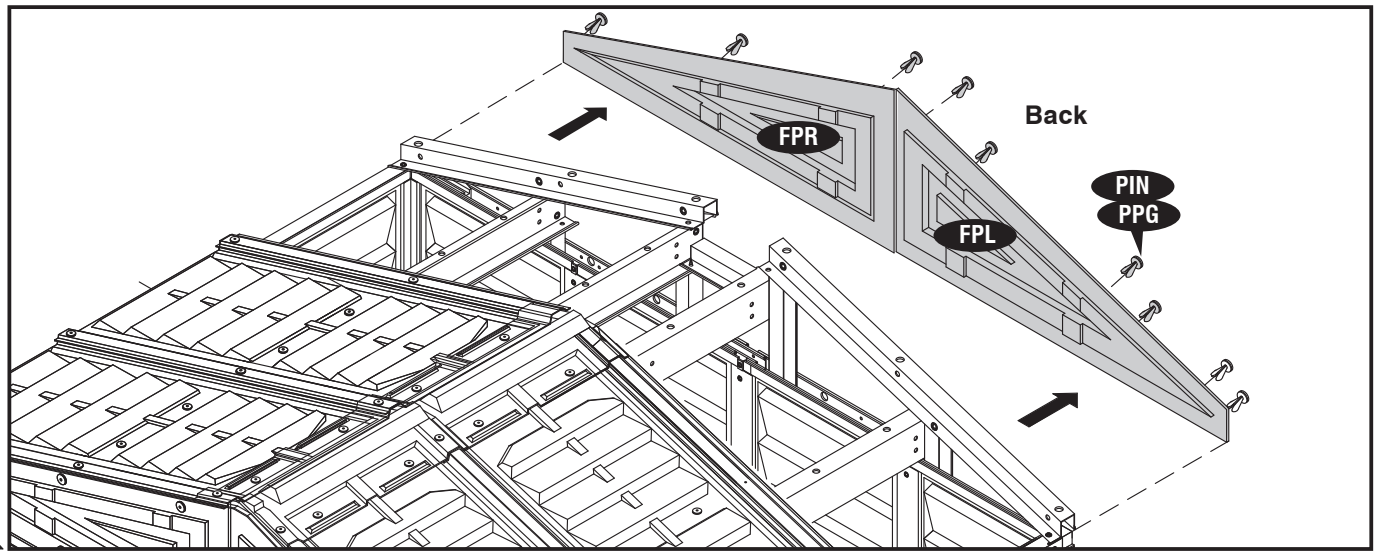

4

Note *Support not included*

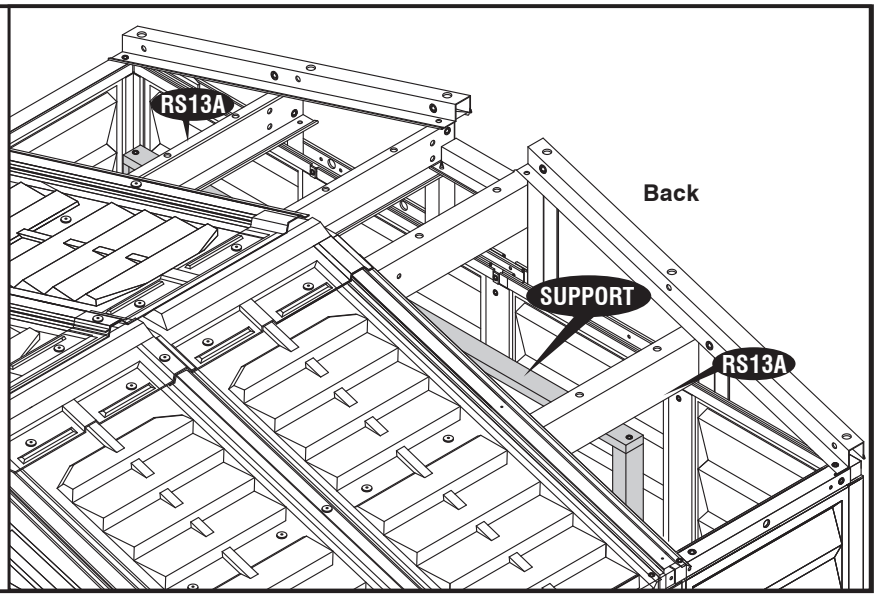

5

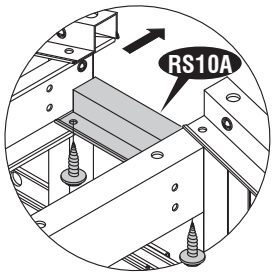

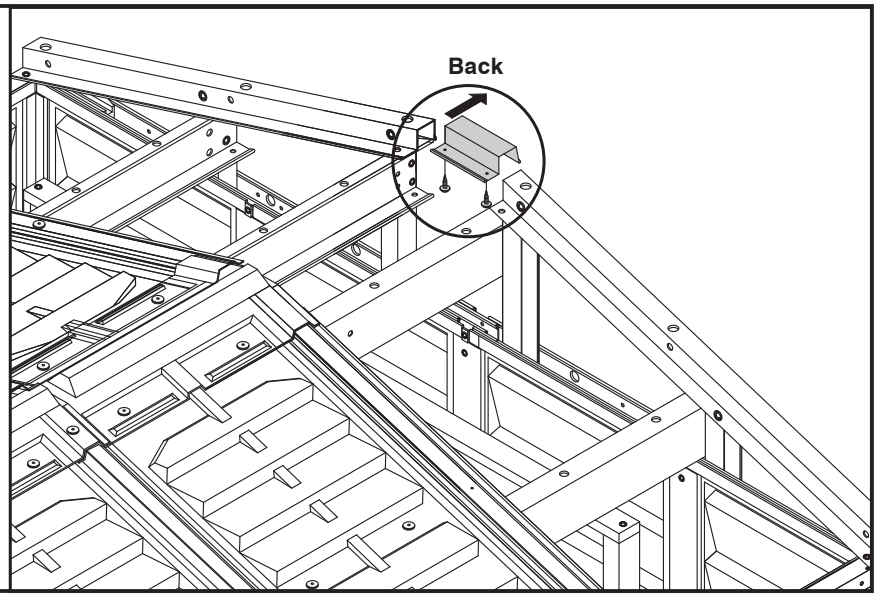

6

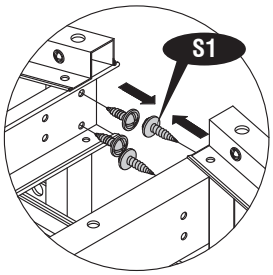

Fig.1

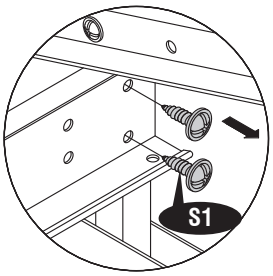

Fig.2

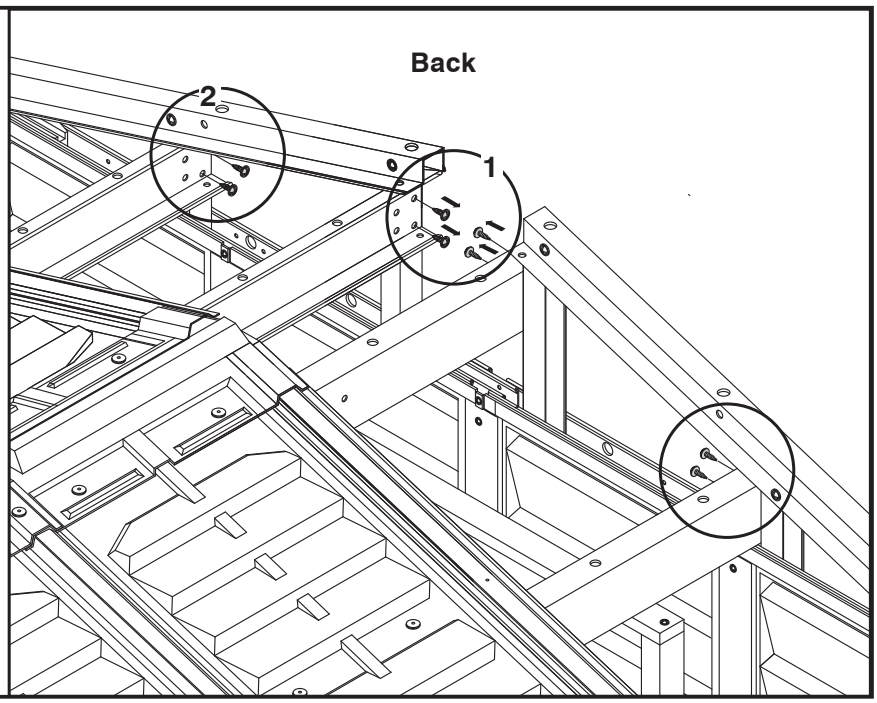

7

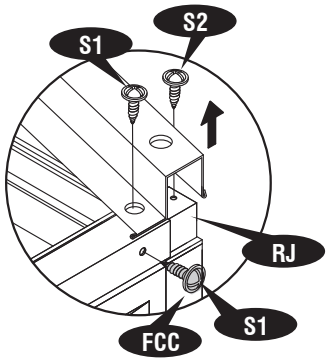

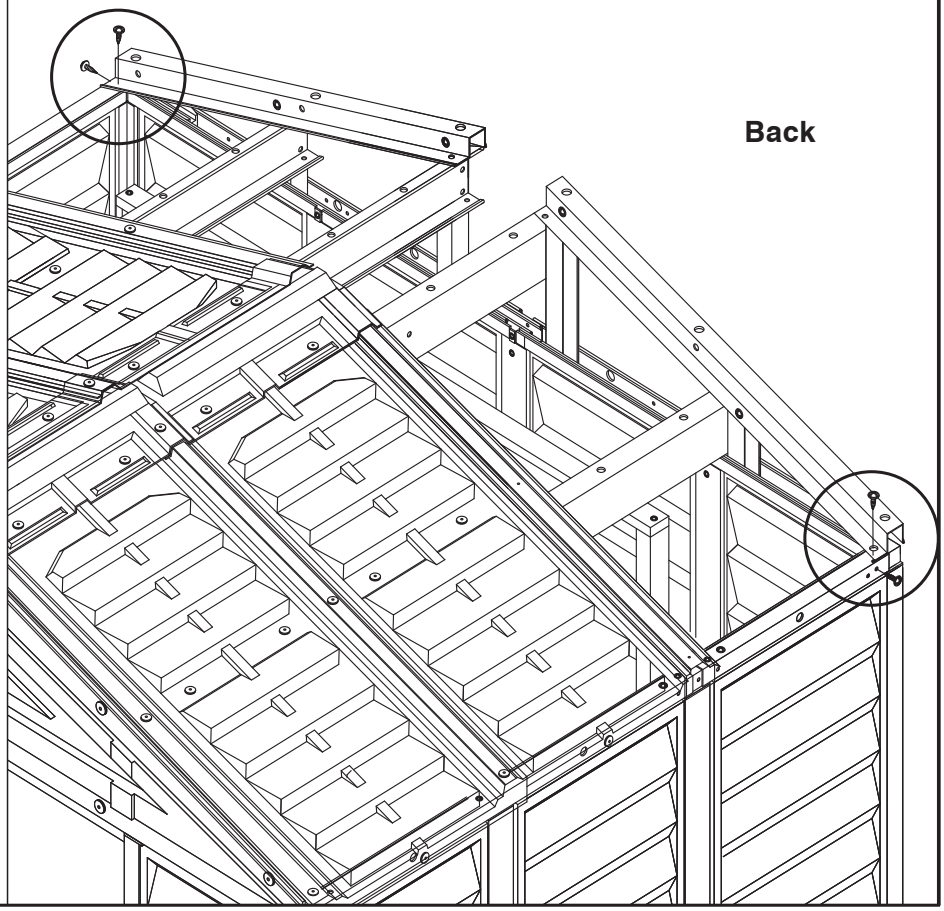

8

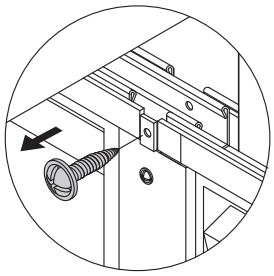

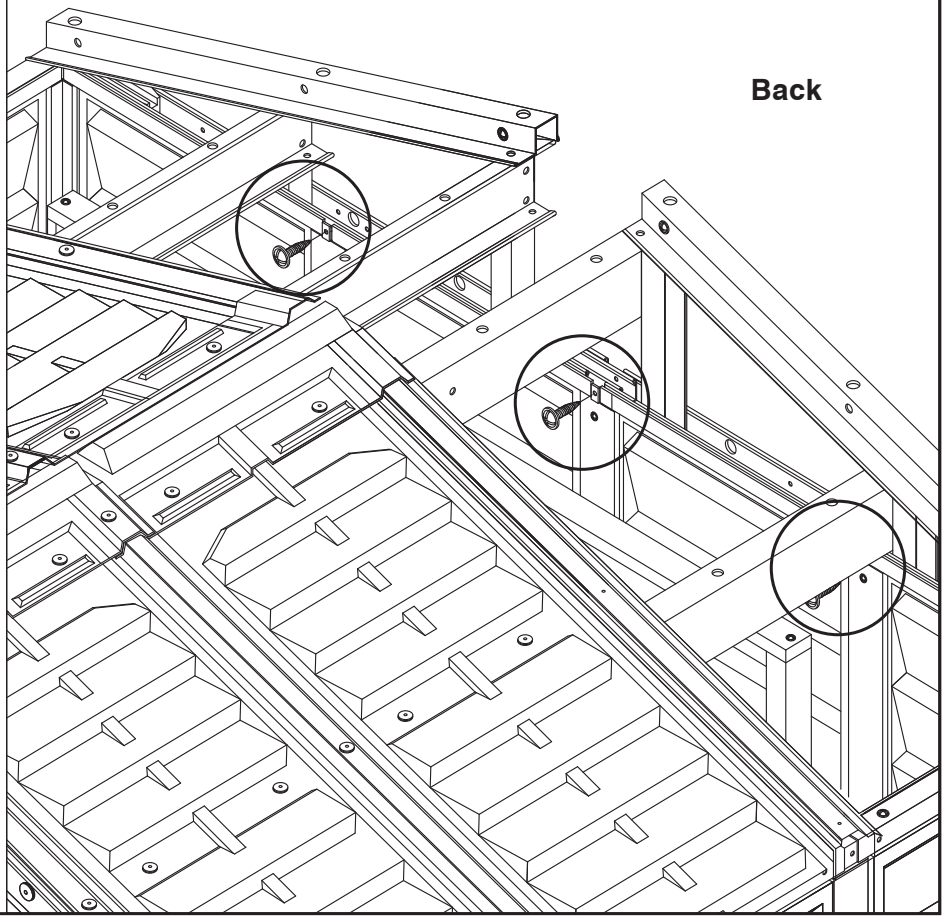

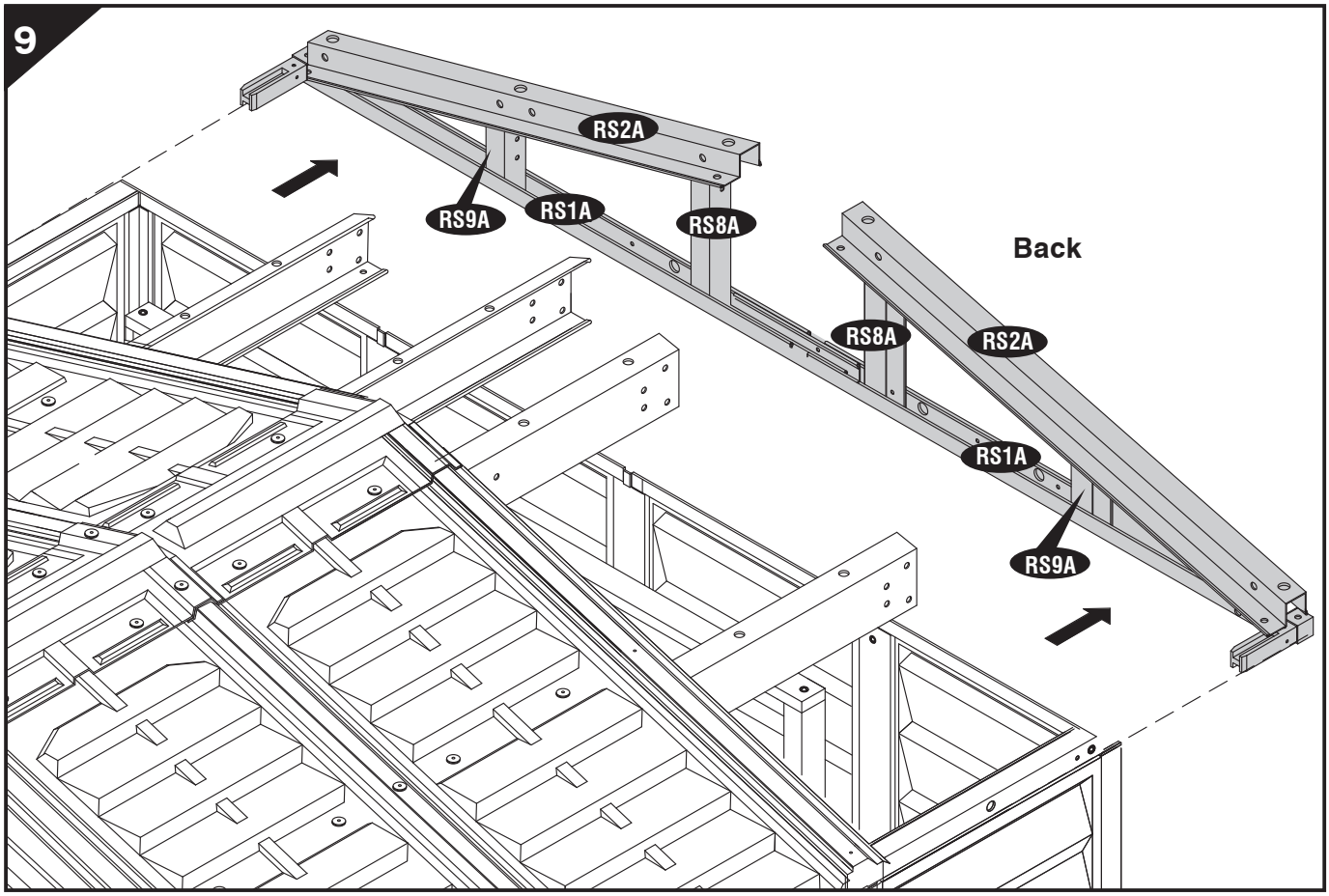
9
RS2A
RS9A
RS1A
RS8A
Back
RS8A
RS2A
RS1A
RS9A

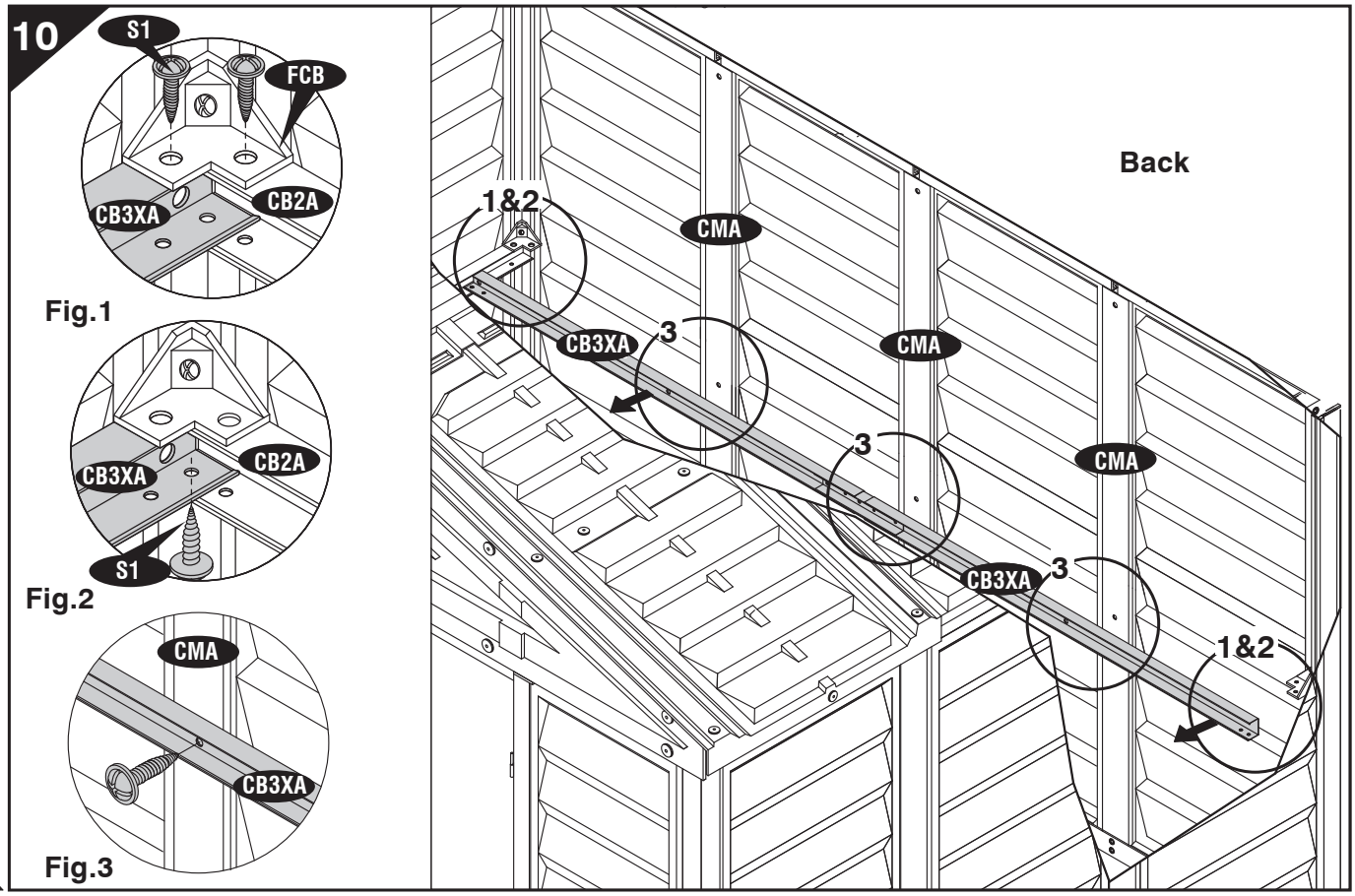
10
S1
FCB
CB3XA
CB2A
Fig.1
CB3XA
CB2A
S1
Fig.2
CMA
CB3XA
Fig.3
Back
1&2
CMA
CB3XA
3
CMA
3
CMA
CB3XA
3
1&2

11

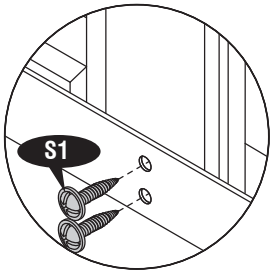

Fig.1

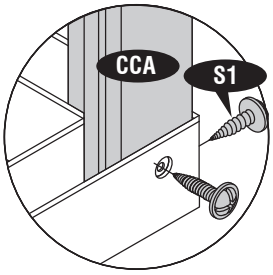

Fig.2

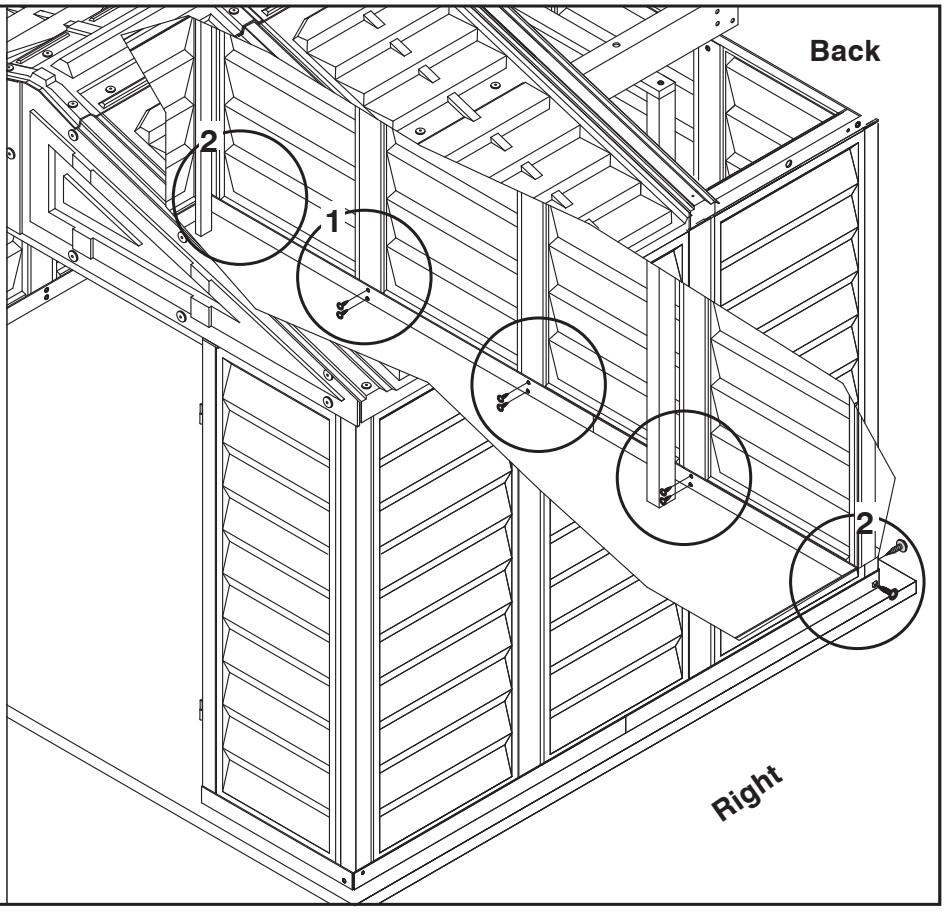

12

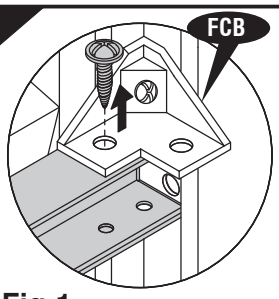

Fig.1

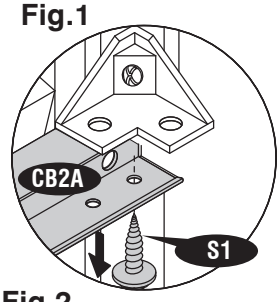

Fig.2

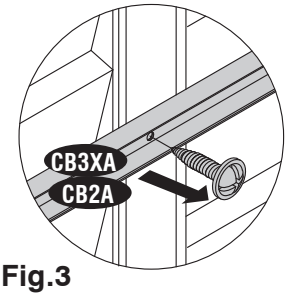

Fig.3

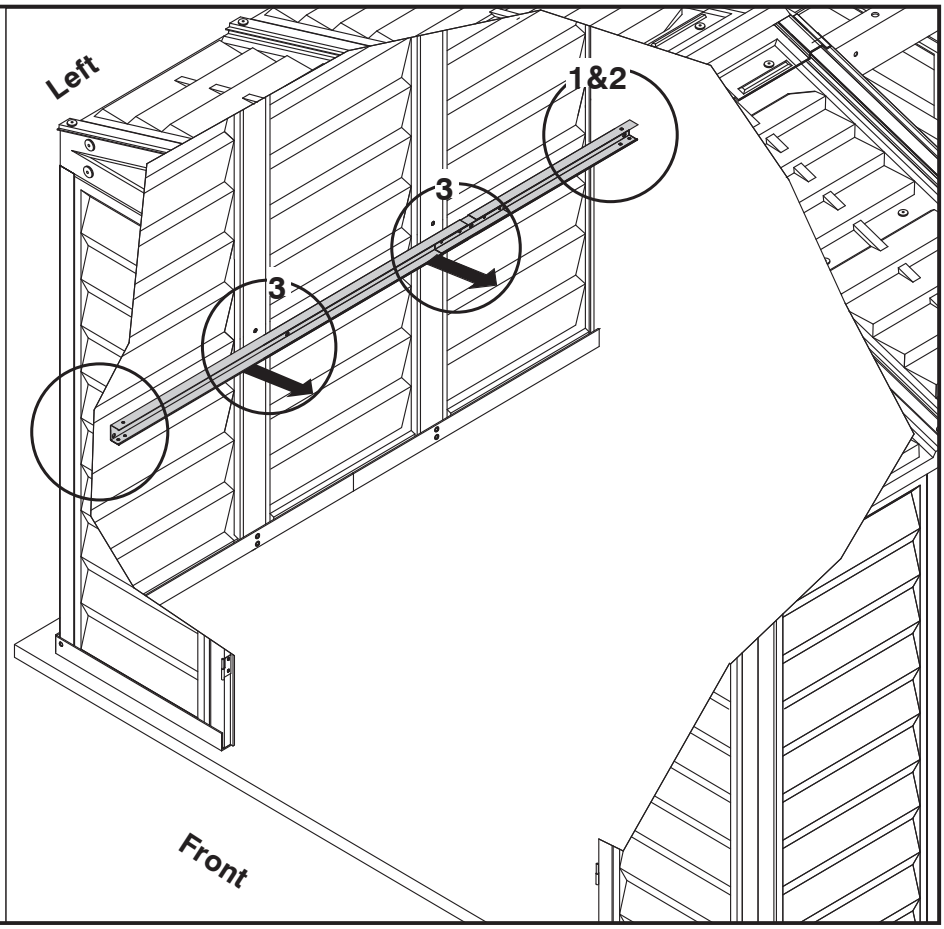

13

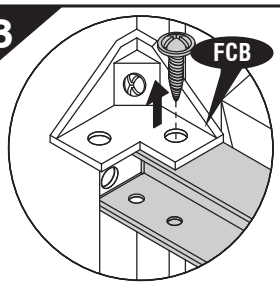

Fig.1

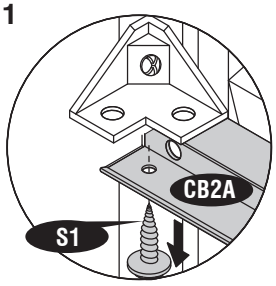

Fig.2

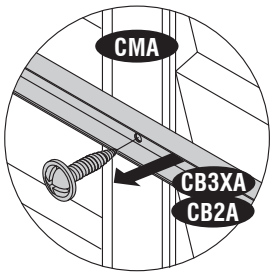

Fig.3

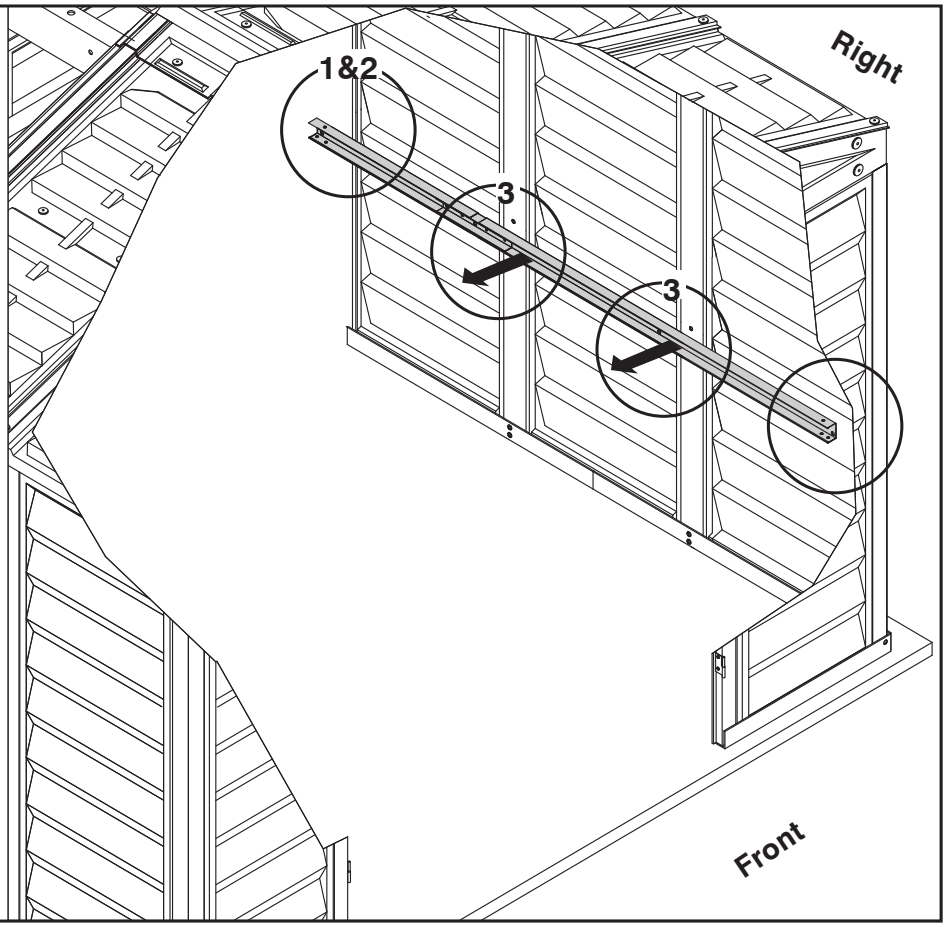

14

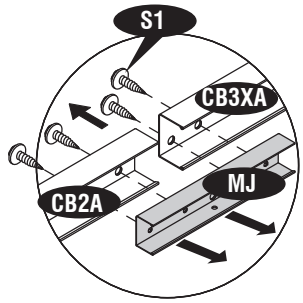

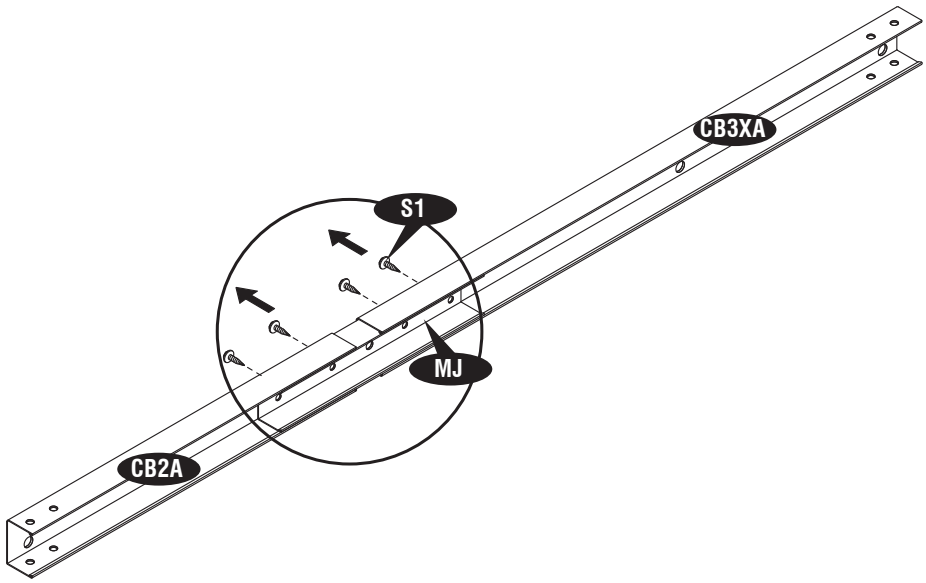

Note

Come back to 10 x 8 extension kit manual (PART -1) and follow the steps accordingly.

U.S. Polymers, Inc.
1057 S. Vail Ave
Montebello, CA 90640,
United States of America