DURAMAX™ ALL PURPOSE VINYL GARDEN SHEDS — A Product of USP US POLYMERS INC

Vinyl Garden Shed

OWNER'S MANUAL /
Instructions for Assembly '4 Ft SideMate'-V2
Size 4 Ft x 8 Ft / 1.2 m x 2.4 m (Approx.)

Patent #416.091

ISO 9001:2008

Ver: 0.0

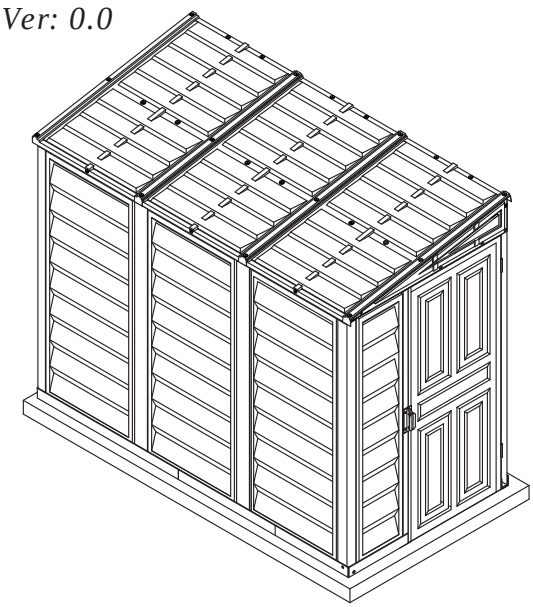

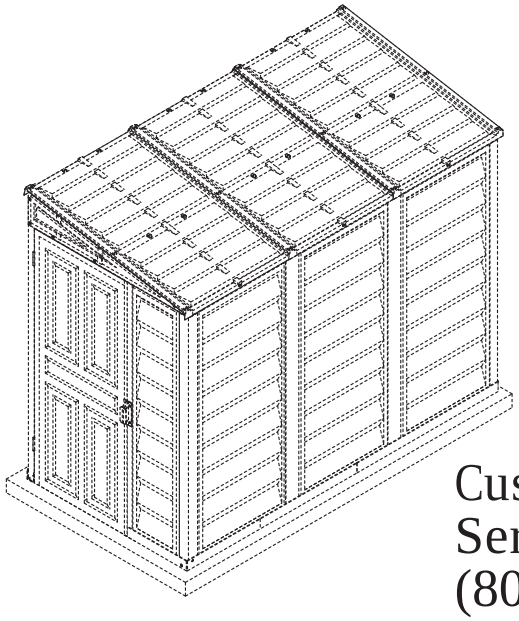

Customer
Service Hotline
(800) 483-4674
www.duramaxbp.com

Your Total Solution To Maintenance Free Storage Sheds.

- All Weather Durable PVC
- High Head Room For Garden Implements
- Won't Dent, Rust, Rot or Mildew
- Never Needs Painting
- Wide Single Door
- Easy Assembly
- Pad Lock Ready (Lock not included)
- Wooden or Cement Foundation Needed

Available Kits

- Foundation Kit Available
- Window Kits Available

Call us for any missing or damaged parts.
Do not return to the store.

Building Dimensions :

Approximate Size	Storage		Exterior Dimension					Interior Dimension		Door Opening	
	Area	Volume	Base Dimension			Roof Edge to Edge		Wall to Wall			
				inch	cm	inch	cm	inch	cm	inch	cm
4 Ft x 8 Ft	29 1/4 Sq. Ft	154 1/4 Cu.Ft	Width	47 1/2	120.6	48	121.9	45 1/2	115.5	29 3/4	75.5
1.2 m x 2.4 m	2.7 Sq.m	4.3 Cu.m	Depth	94 1/4	239.3	95 1/8	241.6	92 1/4	234.3		
			Height			73	185.4	63 3/8	161	61 3/4	156.8

Duramax Garden Shed
Limited Fifteen Year Warranty

U.S. Polymer Inc. will send a replacement part free of charge, in the event of material defects and or workmanship for a period of fifteen years from the date of purchase.

This warranty is extended only to the original purchaser. A purchase receipt or other proof of date of original purchase will be required before warranty service is rendered. In no event shall we pay the cost of flooring, labor, installation or any other costs related thereto.

This warranty only covers failures due to defects in material or workmanship which occurs during normal use and does not extend to color change arising due to normal weathering or to damage resulting from misuse or neglect, commercial use, failure to follow assembly instructions and the owner's manual (including proper anchoring of the shed), painting, forces of nature and other causes which is beyond our control.

Claims under this warranty must be made within the warranty period by calling 1-800-483-4674 or mail in a dated sales slip and clear photograph of the part to:

U.S. Polymers, Inc.
1057 S. Vail Ave Montebello,
CA 90640.

We reserve the right to discontinue or change components. If a component has been discontinued or is not available,
U.S. Polymers, Inc. reserves the right to substitute a component of equal quality as may be compatible.

Limits and Exclusions

There are no express warranties except as listed above. The warrantor shall not be liable for incidental or consequential damages resulting from the use of this product, or arising out of any breach of this warranty. All express warranties are limited to the warranty period set forth above. Some states do not allow the exclusion or limitation on how long an implied warranty lasts, so the above limitations may not apply to you.

This warranty gives you specific legal rights and you may also have other rights which vary from state to state or country to country.

Location of Product Labels

Behind left Door Panel for Basic Shed.

SAFETY & PRECAUTIONS

Before You Begin...

1. Check your local building codes regarding footings, location, etc.

2. Select a site that allows enough working space around the shed.

3. Determine building foundation and anchor system.

4. Read and understand the Owner's manual enclosed in the package.

5. Follow all directions and dimensions thoroughly.

6. Follow the steps given in the manual carefully for correct assembly.

7. Make sure all parts are present before you start assembling.

8. BE SAFE : Follow safety instructions and avoid injury. (See inside page).

9. GROUND MUST BE EVEN : Make sure the foundation frame lies flat on the ground. Ifthe earth bed is uneven, remove sod and other debris and level it with a flat shoval.

10. Separate contents of the carton by the part number and review the list. Be sure you have all the necessary parts for your shed. Refer Owner's manual for part list.

SAFETY & PRECAUTIONS

For your own safety, please read and follow these instructions during the shed assembly.

1. Always wear work gloves, long sleeves and eye protection during assembly of the shed. Some pieces of the shed contain sharp edges and can cause injury.

2. Be cautious with the tools used for the assembly of the shed.Familiarize yourself with the operation of all the power tools.

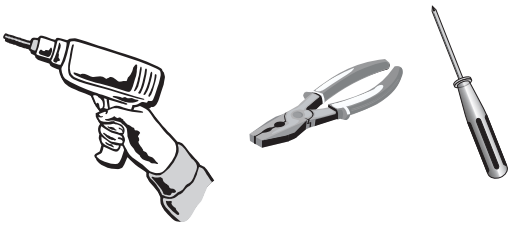

3. Children and pets should be kept away from the assembly site to avoid any distractions and accidents.

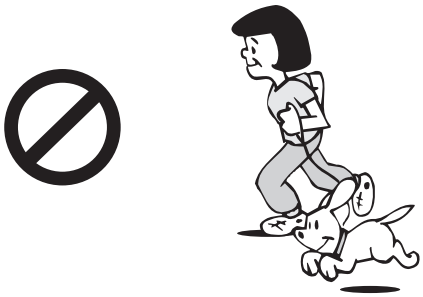

4. When using a step ladder, make sure it is on even ground and fully open with the safety latch in place. Never concentrate your full weight on the roof or any part of the shed.

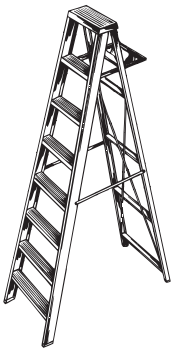

5. Do not attempt to assemble the shed on a windy day. Shed panels can be whipped across by the wind making the worksite difficult and dangerous.

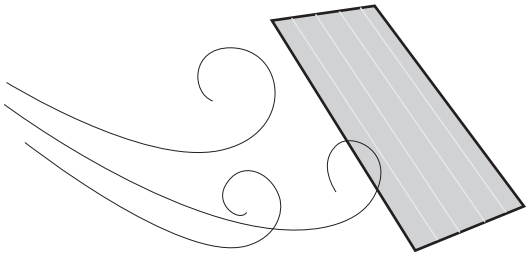

IMPORTANT

☞ Wear eye protection when using any form of power tools. Do not use voltage power tools in a wet or damp enviornment to avoid electric shock.

☞ Do not use any part of the shed as a means of personal support while attaching componets during assembly.

☞ The shed must be constructed on a solid base foundation. A concrete pad or a large size concrete patio stone squares is recommended for suitable floor base. Make sure it is firm and level and will allow drainage away from the site. The base foundation should be at least 4 inches (100mm) larger than the shed dimensions. Please refer to the front page of your owner's manual for the exterior dimensions of the shed. Manufacturer is not responsible for the choice and construction of the foundation.

Note

For a concrete pad base, prepare a level bed for a firm footing layer of crushed stone. The concrete pad should then be poured to a thickness of 4 inches (100mm) to 5 inches (125mm). Allow to dry thoroughly for at least 48 hours

☞ Your shed must be firmly anchored to the concrete pad or large concrete patio stone squares, to help protect against damage in high winds.

Care & Maintenance

Although this unit does not require any maintenance, care should be taken to prolong the life of your shed.

ROOF : Keep roof clean of leaves and snow with long handled, soft bristled broom. Heavy amounts of snow on the roof can damage the shed making it unsafe. Do not step on the roof.

WALLS : Do not rest any object against the wall panels of the shed.

DOORS : Keep doors closed to prevent wind damage.

FASTENERS : Regularly check your shed for loose screws, bolts, nuts, etc. And retighten them as necessary.

MOISTURE : With changing temperatures, condensation will accumulate inside the shed. Good ventilation will help in regulating and avoid moisture.

TIP : A noncorrosive caulking is helpful to seal the shed.

DO NOT store swimming pool chemicals in your building.
Combustibles and corrosive must be stored in
air tight containers

Parts List

Note: Check all parts prior to installation.

PARTS

CODE	QTY	CODE	QTY
B1LS	1	RS9B	2
B1RS	1	RS5S	1
B21Q	1	RS6S	1
B22Q	1	RS14S	3
B3S	1	CMB	3
B4LS	1	CMS	2
B4RS	1	CCS	2
B5S	1	CCRS	1
CB1S	1	CCES	1
CB2S	1	CDLC	1
CB3S	1	CDRS	1
CB2Q	2	FSPC↑	2
CB3Q	1	SP↑	4
CB4S	1	SPS↑	3
CB6S	1	RPS↑	3
DSHC	1	FPLC	1
MJ	2	FPRC	1
RS1S	2	DR	1
RS2FS	1		
RS2BS	1		
RS4S	2		
RS3LQ	1		
RS3SQ	1		
RS3LS	1		
RS3SS	1		

ACCESSORIES

CODE	QTY
FDCLS	2
FDCRS	2
FCC	2
FMC	5
FRLC	2
CCF	3
CMF	2
LSH	2
RSH	2
RJ	2
PPG	43
PWS	43
PIN	43
ST	1.57meter.
VC	2
VCP	4
S1	125
S2	7
S3	8
S7	11

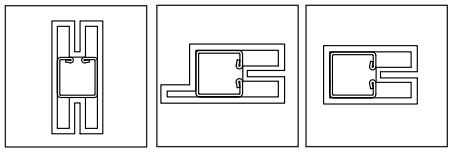
CMB, CMS

CDLC

CDRS

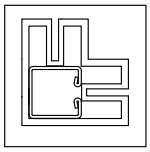
CCS

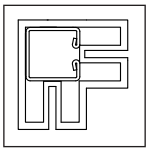
CCRS

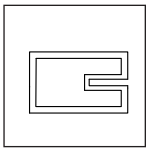
CCES

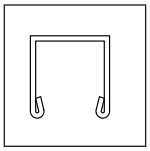
MJ,RS1S,RS3LS, RS3SS,RS3LQ, RS3SQ

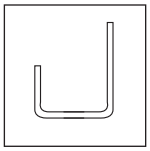
B1LS, B1RS, B21Q, B22Q, B3S, B4LS, B4RS, B5S

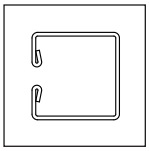
COAS

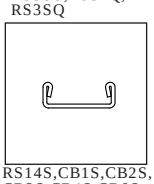
RS14S,CB1S,CB2S, CB3S,CB4S,CB6S, CB2Q,Cb3Q

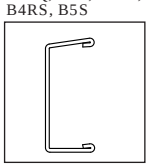
RS5S,RS6S

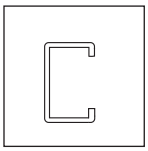
DSHC

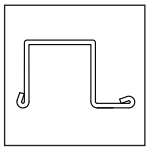
RS2BS,RS2FS, RS4S

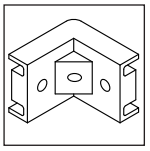
CCF

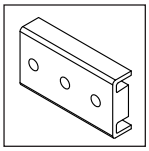
CMF

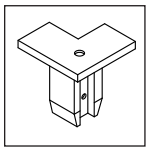
FCC

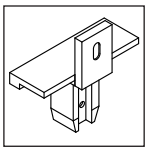
FMC

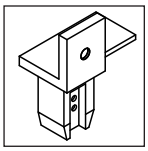
FDCLS

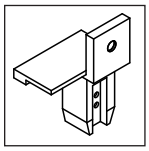
FDCRS

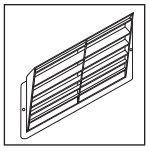
VC

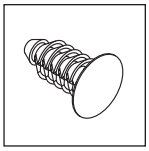
VCP

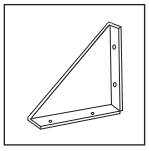
FRLC

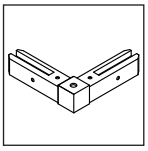
RJ

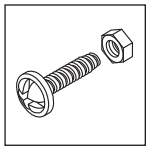
S3

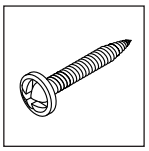
S2

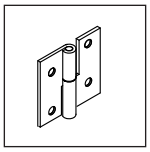
LSH

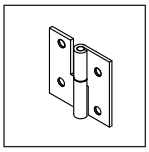
RSH

S1, S7

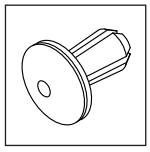
PPG & PWS

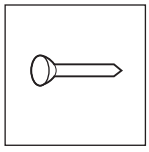
PIN

ST

Note

Before starting installation, please refer Safety & Precautions.

Tools You Will Need

Cordless Drill - Philips Head
Hammer or Rubber mallet
Carpenters Square
8' Step Ladder
Adjustable pliers
Level - 3ft.
Tape Measure
Caulk Gun
Waterproof Clear Silicon Sealant
Hand Gloves

Exploded View

Option -1 Right Side Door

For Right side door follow the page no. 8-30 & 54-57.

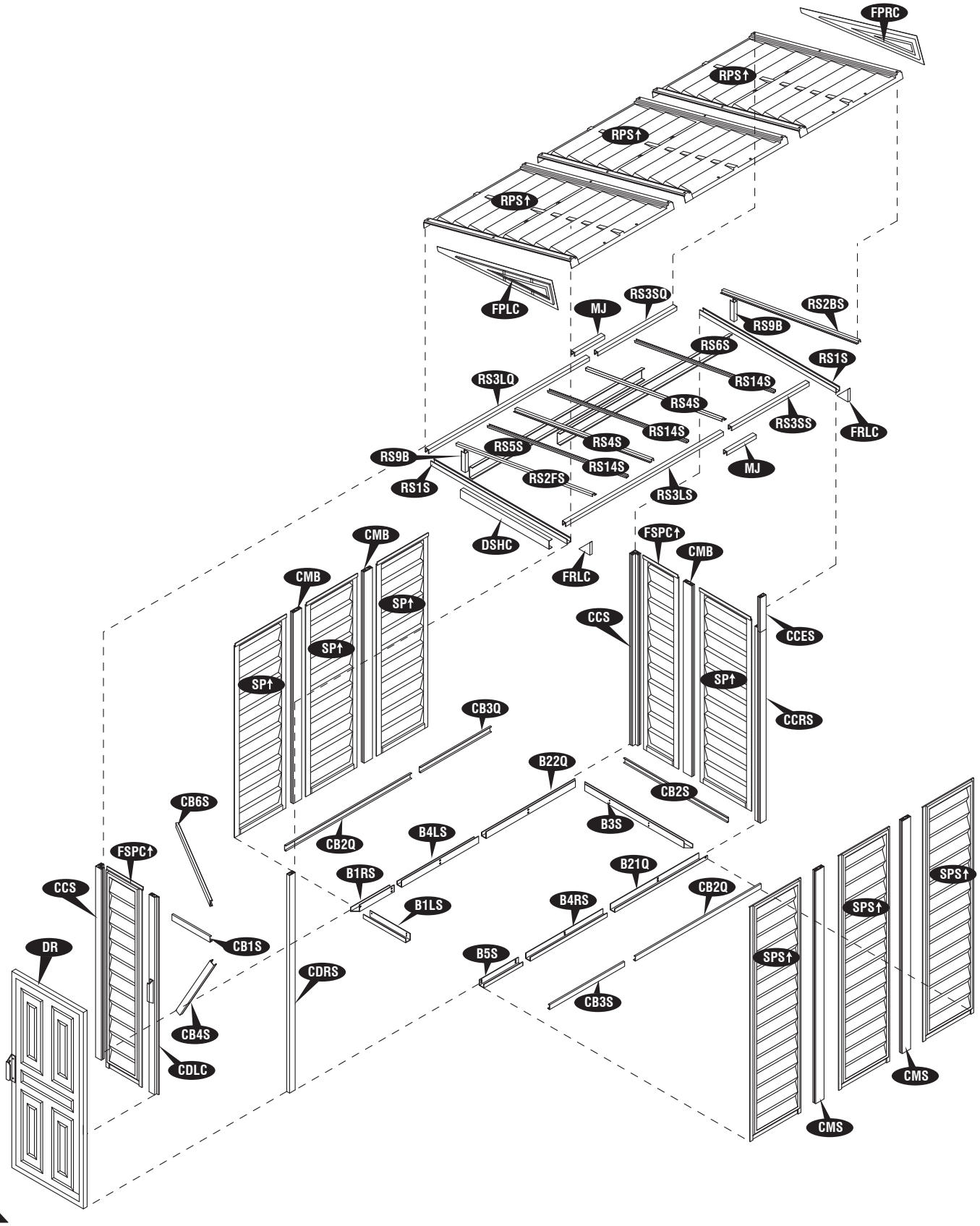

Exploded View

Option -2 Left Side Door

For Left side door follow the page no. 8 & 31-57

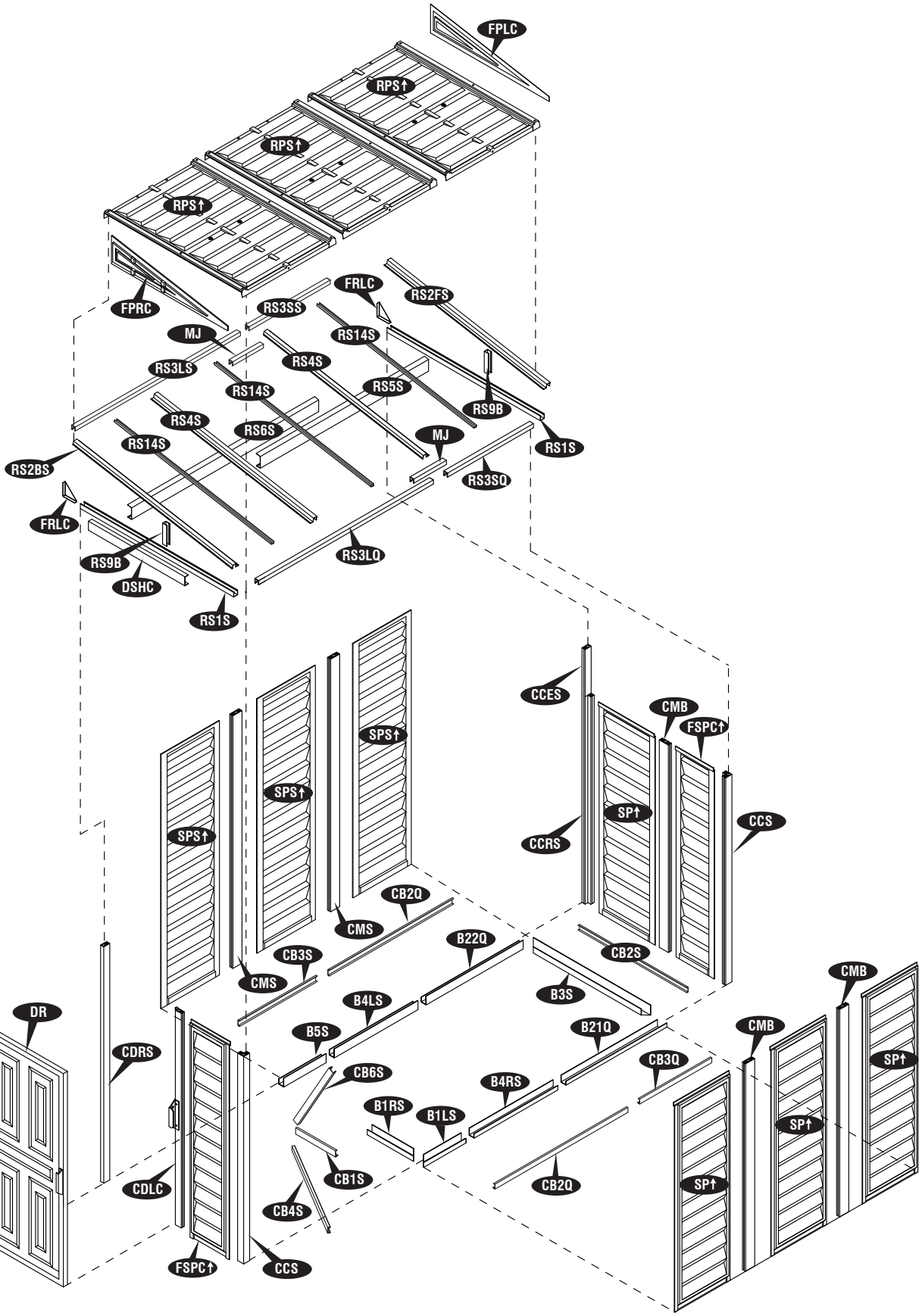

A. Foundation

Note : Do not follow this Foundation instructions , if you have DURAMAX Foundation

DuraMax must be installed on a level wooden platform or a level concrete foundation.

Wooden Platform (Not Included)

The following are a list of lumber and sizes you will need.

Pressure Treated-Wood Studs:
3ea 2”x 4”x 89” (50 x 88.9 x 2260.6mm)
2ea 2”x 4”x 48” (50 x 88.9 x 1219.2mm)

Exterior Grade (CDX):
3/4”(19mm) plywood
1ea 3/4”x 48”x 96” (19 x 1219.2 x 2438.4mm)

L-Brackets: 4ea

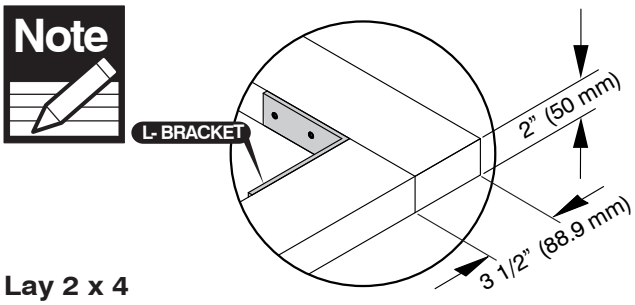

Lay 2 x 4
(Actual size 2”x 3 1/2”, 50mm x 88.9mm)

1

Use pressure treated 2” x 4” (50mm. x 88.9mm.) to build a foundation structure that has an outside dimension of 48” x 96” (1219.2mm x 2438.4mm).

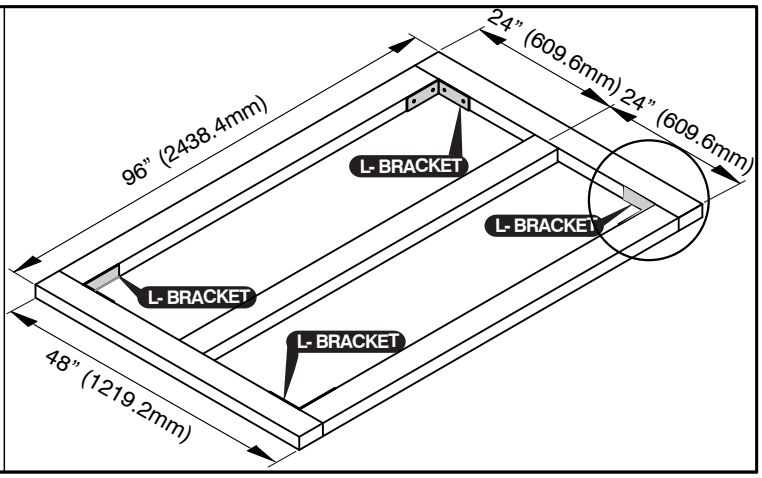

2

Using exterior grade CDX 3/4” (19 mm) plywood, cut and fit together the sheets to form solid plywood floor as shown. Foundation must be square and level.

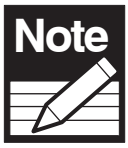

If the shed is assembled with wooden foundation on soil, use the soil anchor kit.

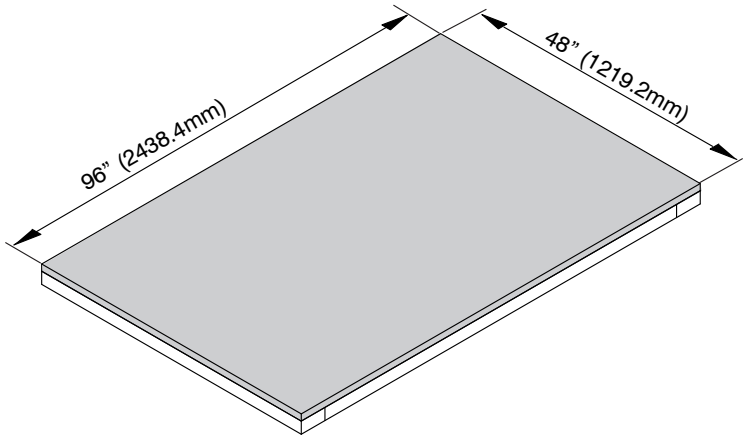

Concrete Platform

The shed must be constructed on a solid base foundation. A concrete pad or a large size concrete patio stone squares is recommended for suitable floor base. Make sure it is firm and level and will allow drainage away from the site. The base foundation should be at least 4 inches(100mm)larger than the shed dimensions. Please refer to the front page of your owner’s manual for the exterior dimensions of the shed. **Manufacturer is not responsible for the choice and construction of the foundation.**

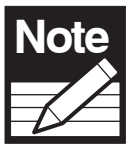

For a concrete pad base, prepare a level bed for a firm footing layer of crushed stone. The concrete pad should then be poured to a thickness of 4 inches (100mm) to 5 inches (125mm). Allow to dry thoroughly for at least 48 hours.

OPTION -1 RIGHT SIDE DOOR.

B. Base channel.

Note

1. *It is important that these instructions are followed step by step.*
2. *All parts are clearly marked and care should be taken to use correct one.*
3. *Don't install under windy condition.*
4. *If iyou are building the shed against a wall, build it 2.5 ft. away then slide it in.*

Parts Needed:

CODE	QTY	CODE	QTY
B1LS	1	B4LS	1
B1RS	1	B4RS	1
B21Q	1	B5S	1
B22Q	1	S1	24
B3S	1		

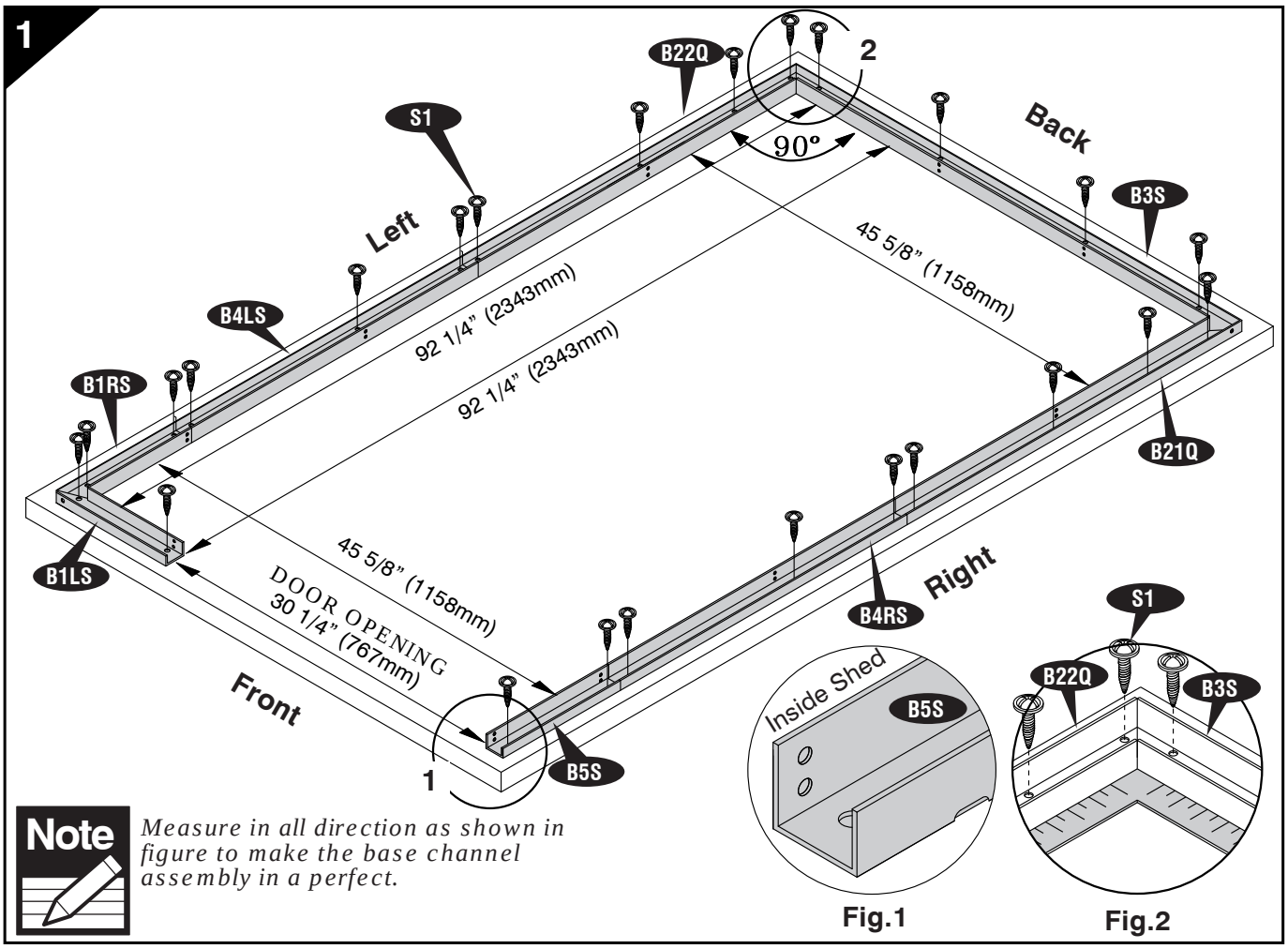

Note

Measure in all direction as shown in figure to make the base channel assembly in a perfect.

Assembly on concrete foundation

Using a carpenter square, line up corners. Align base bars, mark the concrete at the holes in the base and drill concrete with suitable concrete bit to accept 1/4" x 1 1/2" (M6 x 40mm) anchor bolts.
(Qty - 24Nos. not provided).

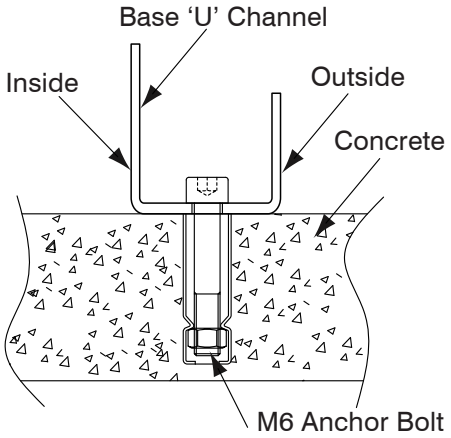

D. Walls & Columns

Note

All panels are clearly marked and care should be taken to use the correct one.

Parts Needed:

CODE	QTY	CODE	QTY
CB1S	1	CMB	3
CB2Q	2	CMS	2
CB3Q	1	CCS	2
CB2S	1	CCRS	1
CB3S	1	CCES	1
CB4S	1	CDLC	1
CB6S	1	CDRS	1
CCF	3	FSPC↑	2
CMF	2	SP↑	4
FCC	2	SPS↑	3
FMC	3	S1	47
FDCLS	2	S2	5
FDCRS	1		

1

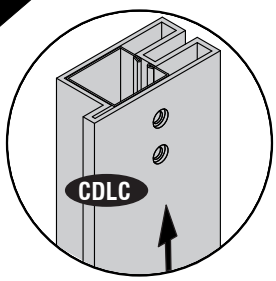

Fig.1

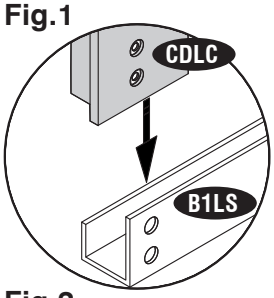

Fig.2

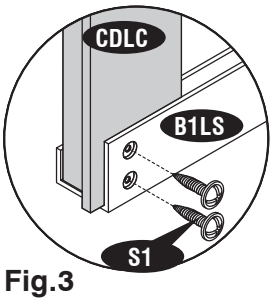

Fig.3

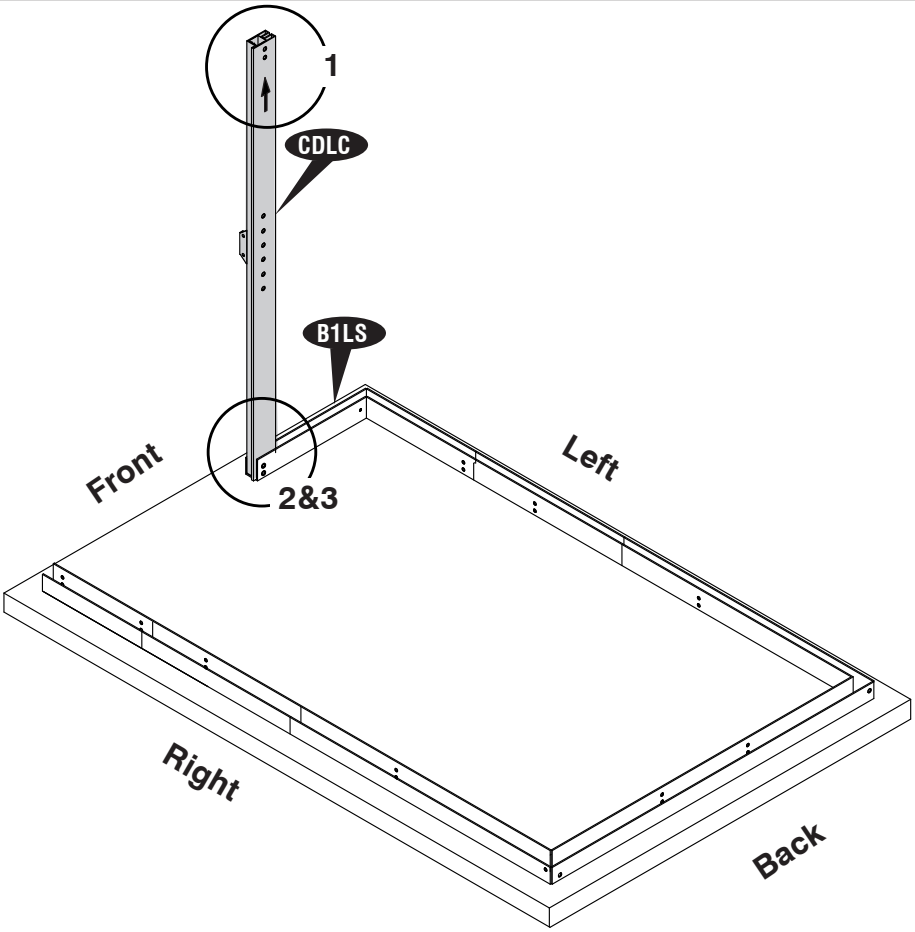

2

Note

Check the stamped label on inside top of all panels.

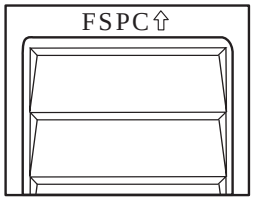

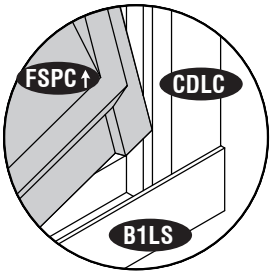

Fig.1

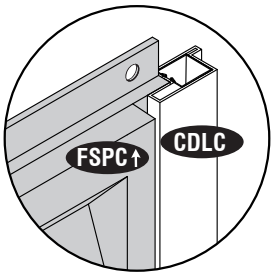

Fig.2

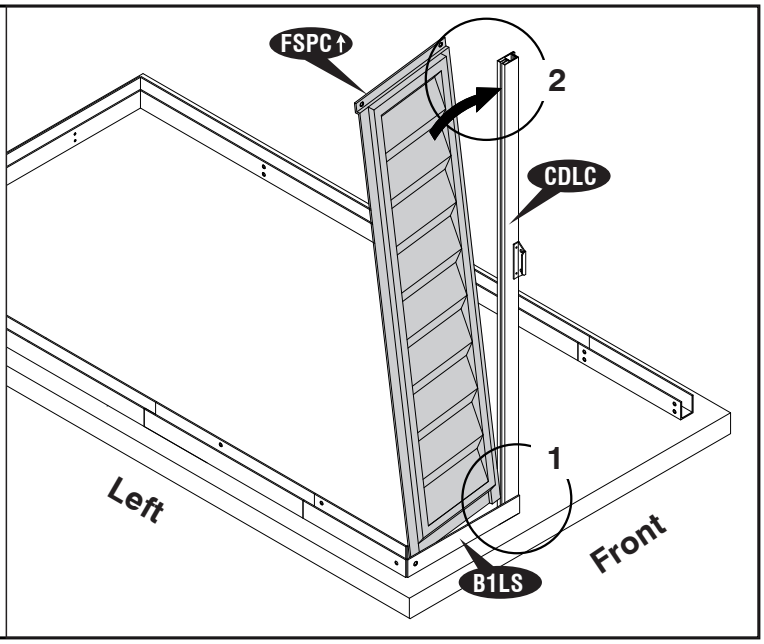

3

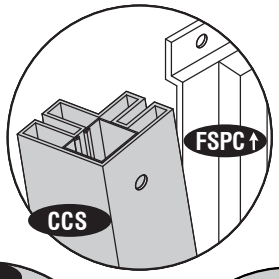

Fig.1

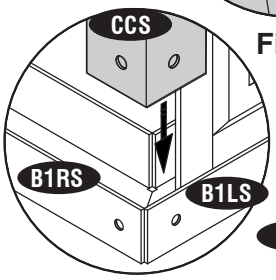

Fig.2

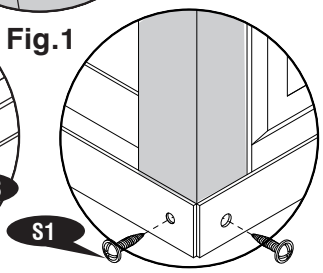

Fig.3

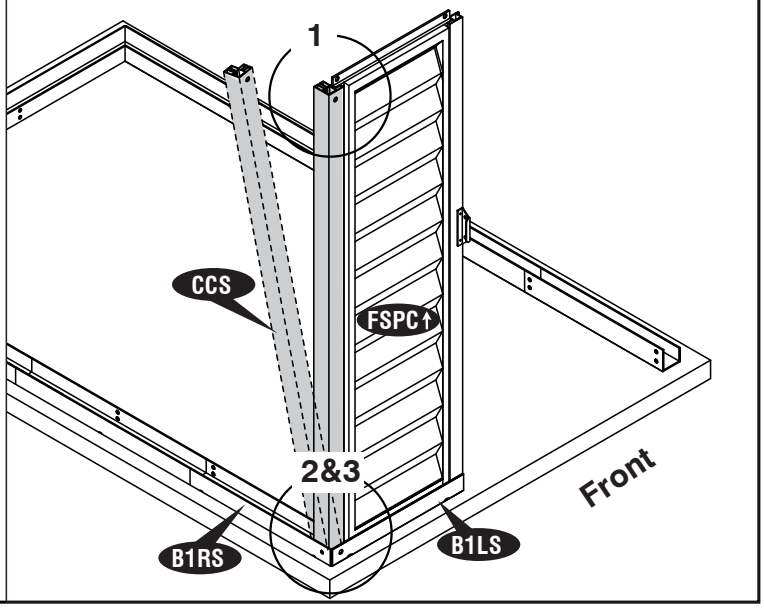

4

Note

Do not tighten the screw. Leave it loose.

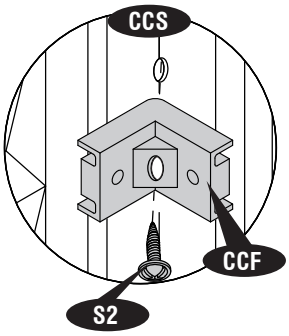

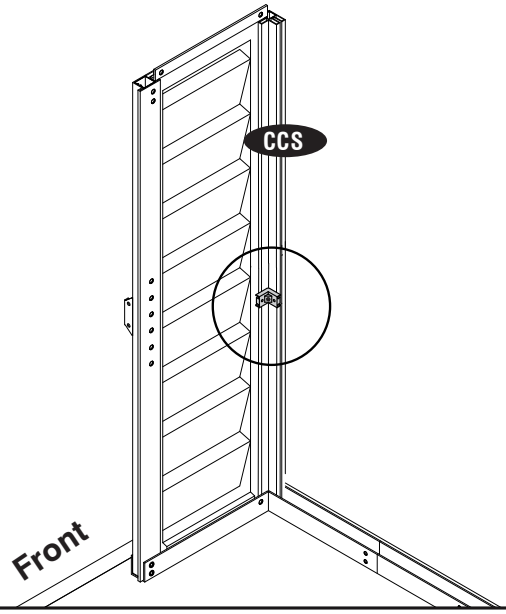

5

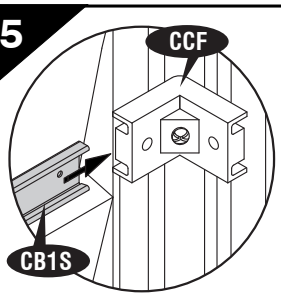

Fig.1

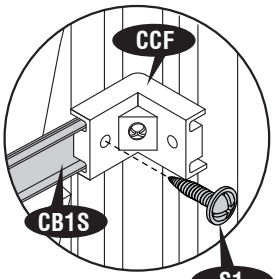

Fig.2

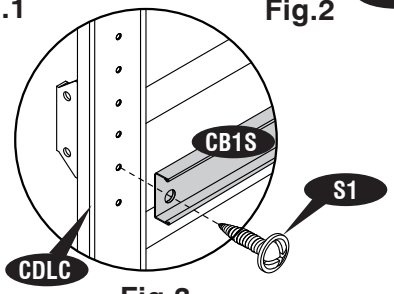

Fig.3

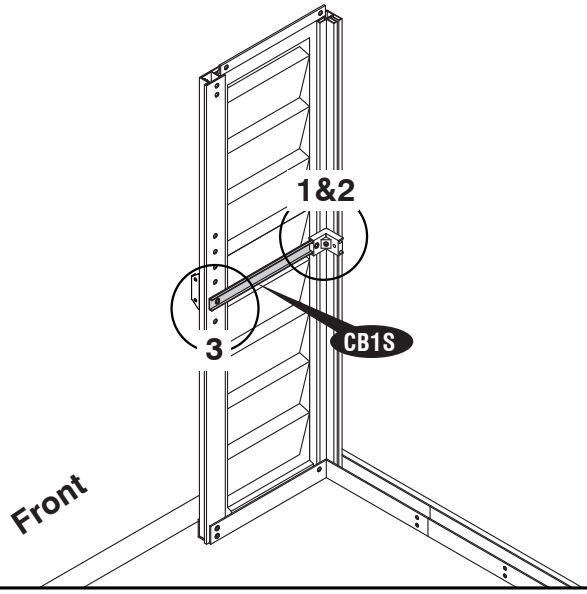

6

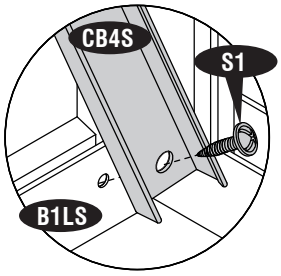

Fig.1

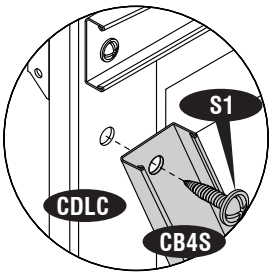

Fig.2

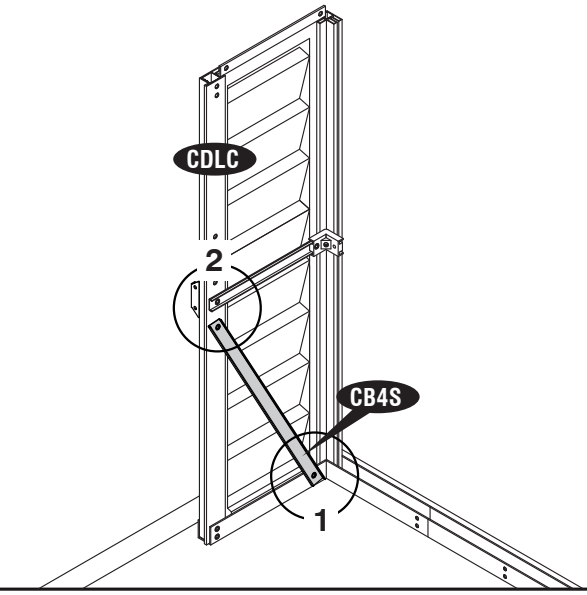

7

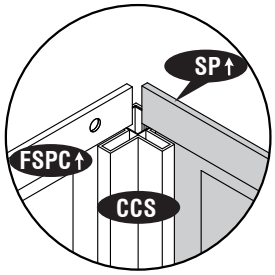

Fig.1

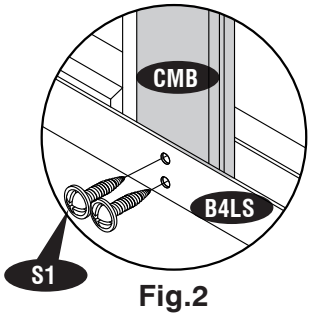

Fig.2

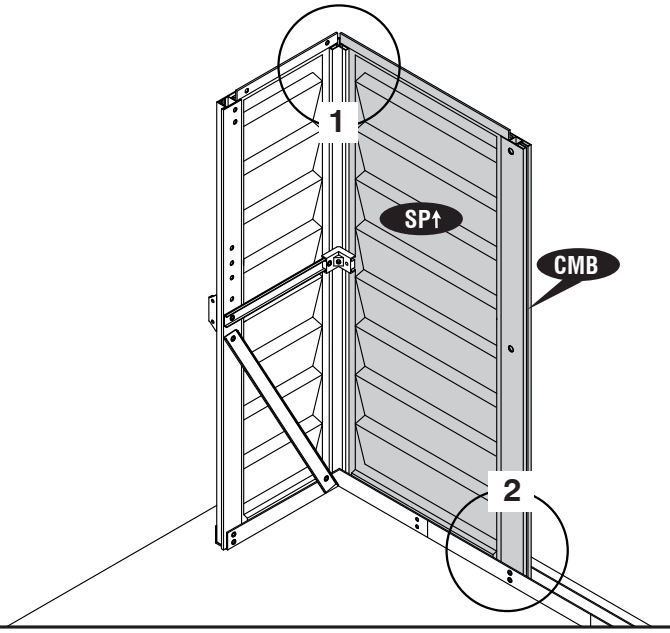

8

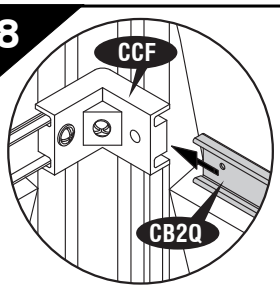

Fig.1

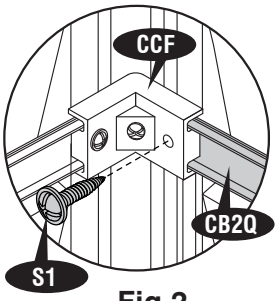

Fig.2

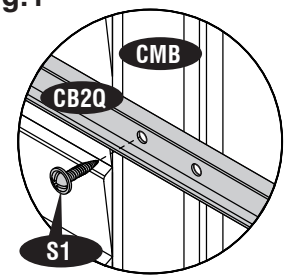

Fig.3

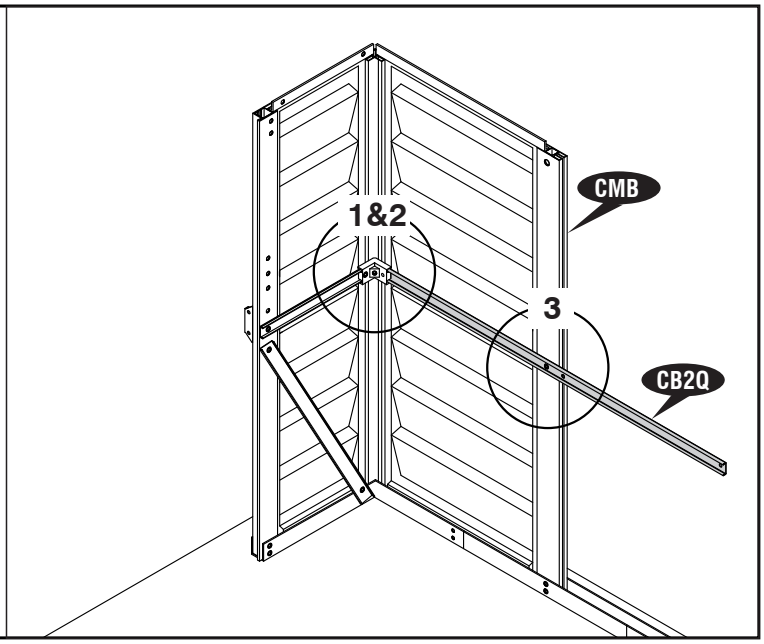

9

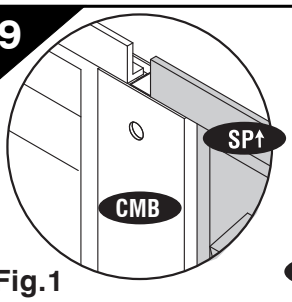

Fig.1

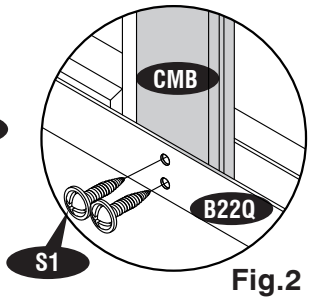

Fig.2

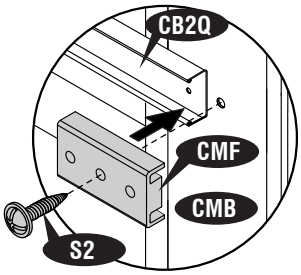

Fig.3

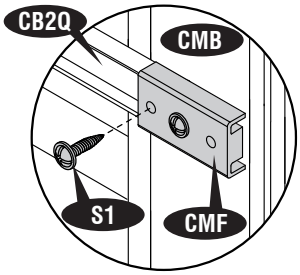

Fig.4

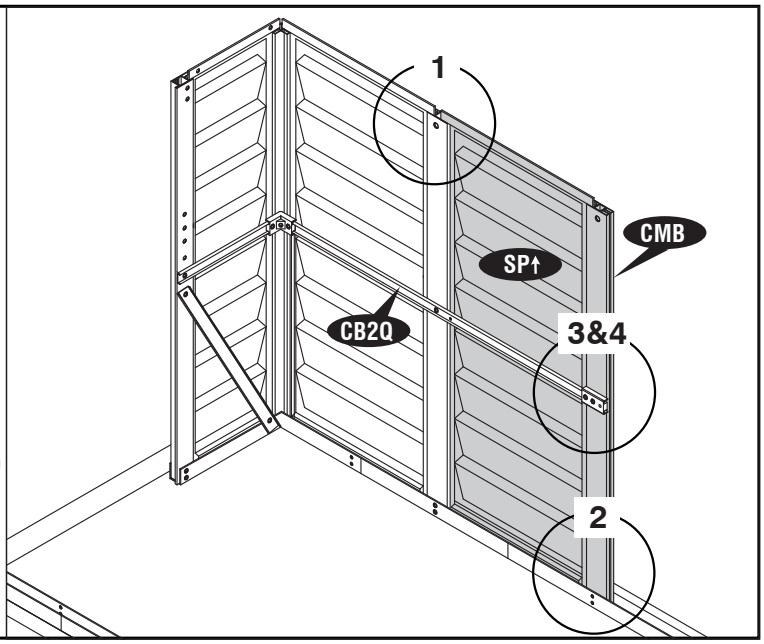

10

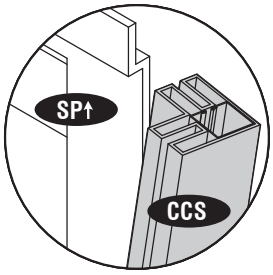

Fig.1

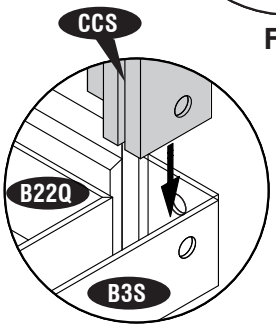

Fig.2

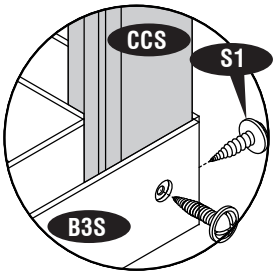

Fig.3

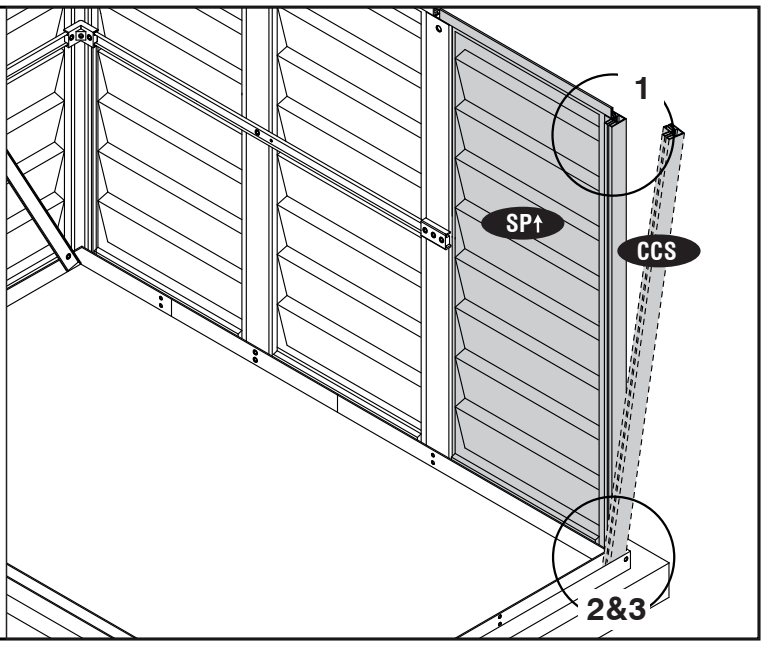

11

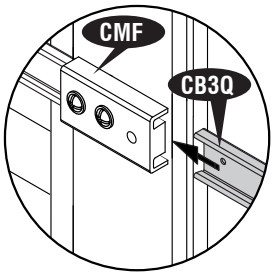

Fig.1

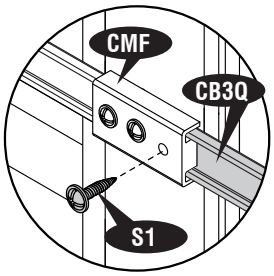

Fig.2

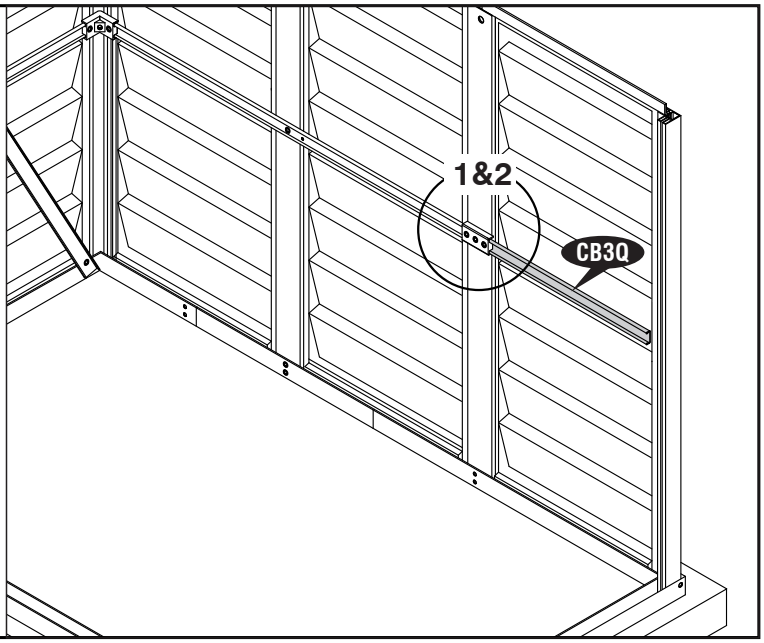

12

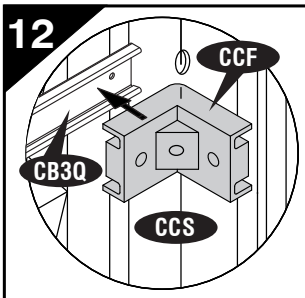

Fig.1

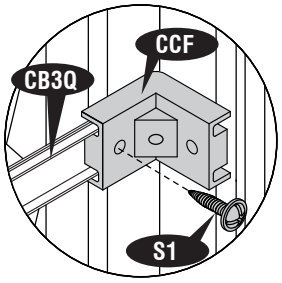

Fig.2

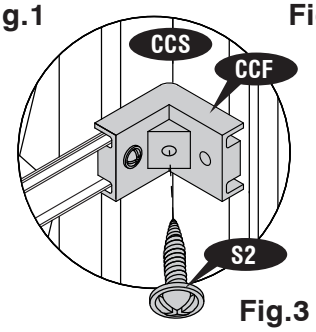

Fig.3

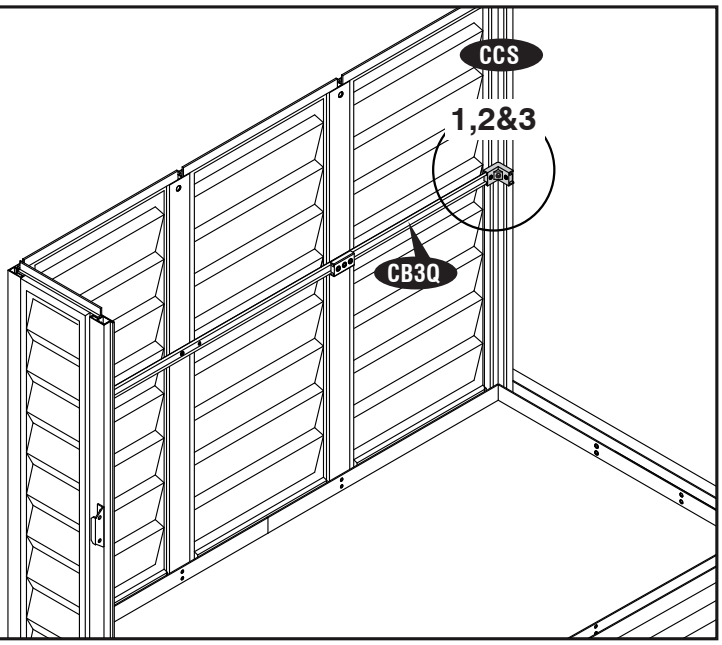

13

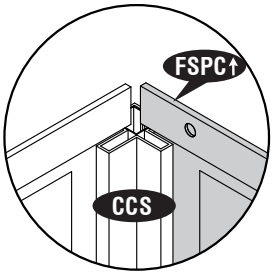

Fig.1

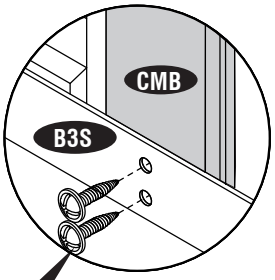

Fig.2

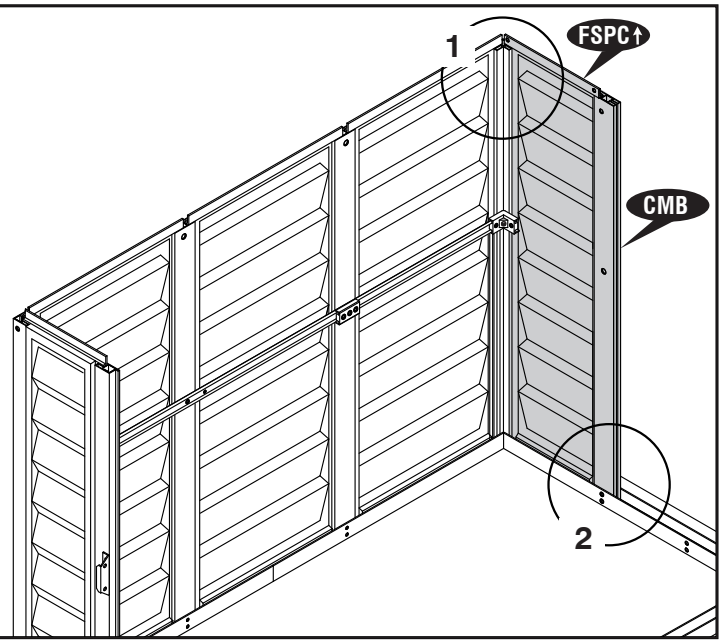

14

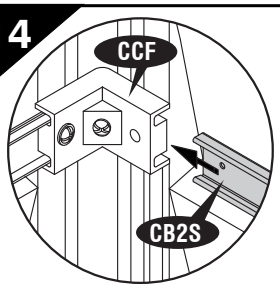

Fig.1

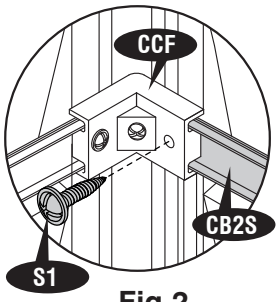

Fig.2

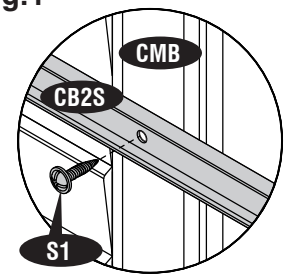

Fig.3

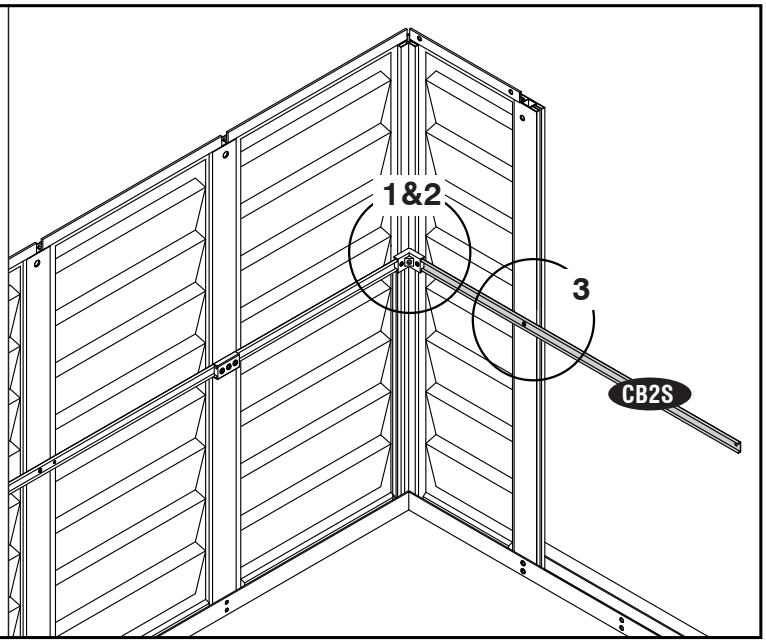

15

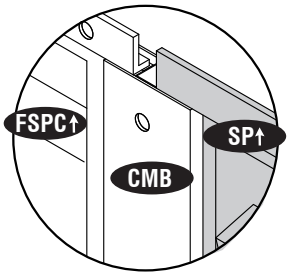

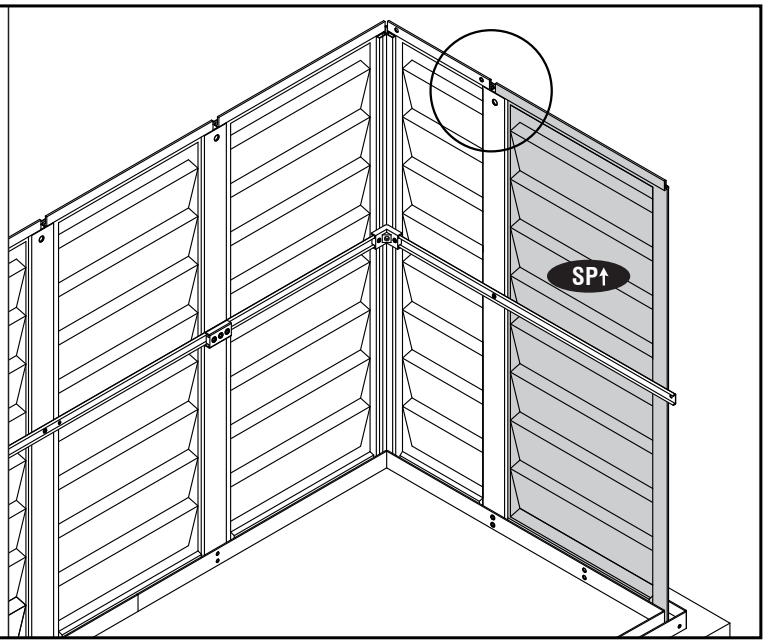

16

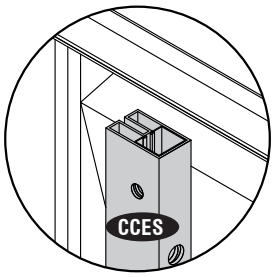

Fig.1

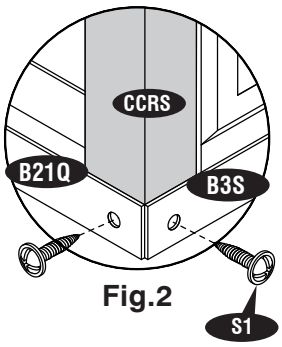

Fig.2

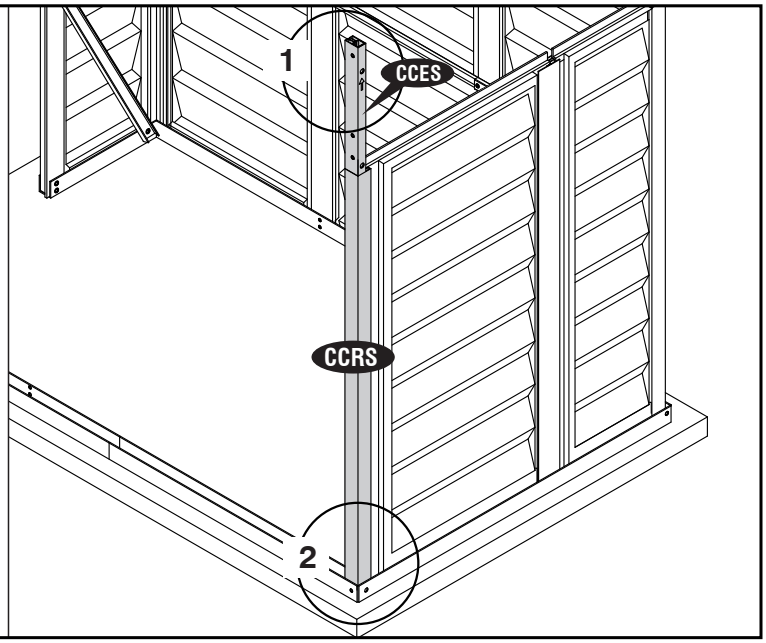

17

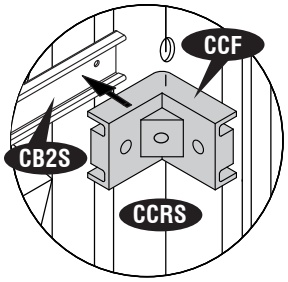

Fig.1

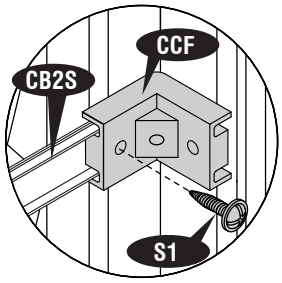

Fig.2

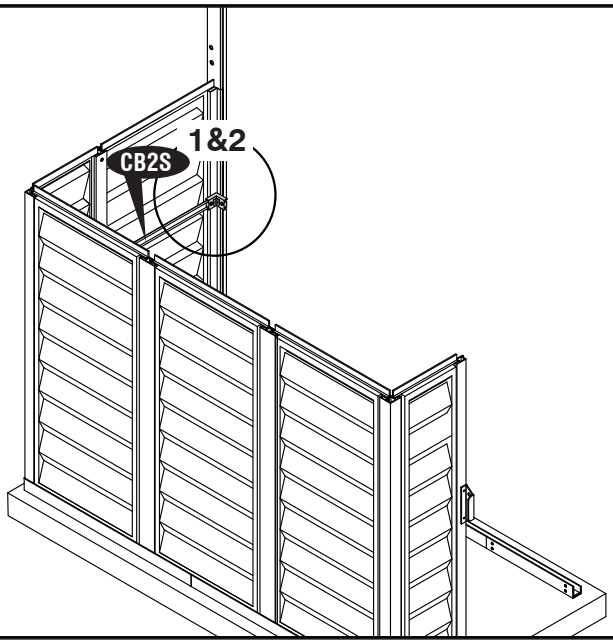

18

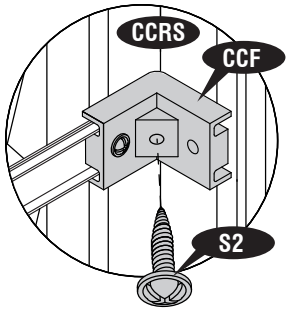

Fig.1

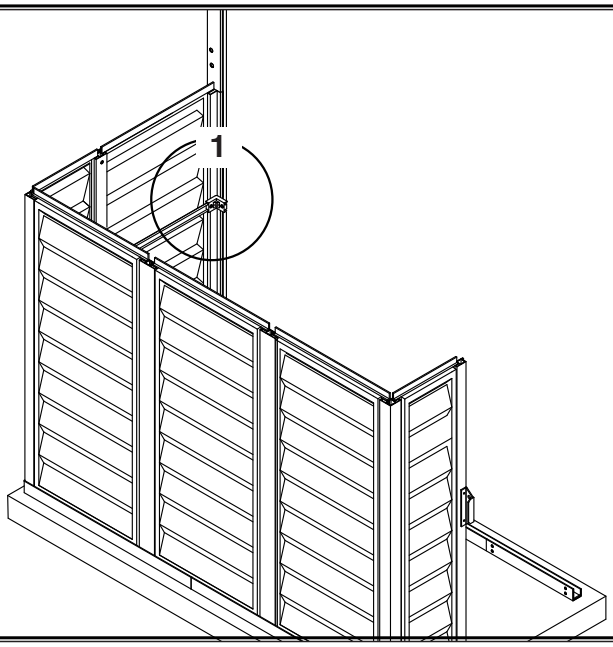

19

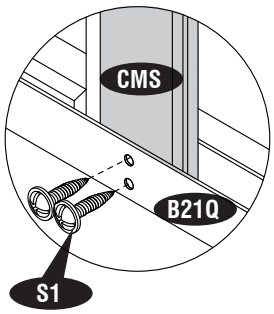

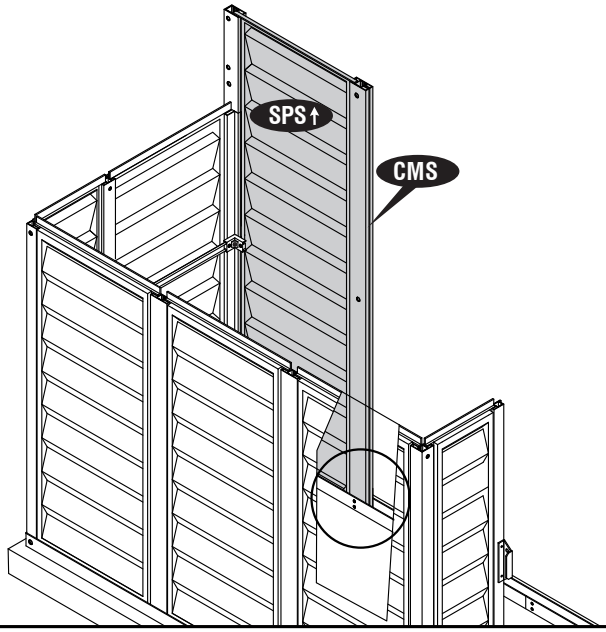

20

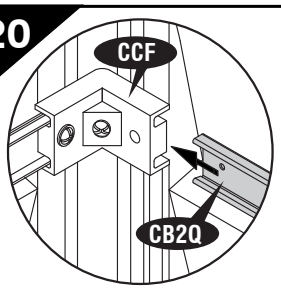

Fig.1

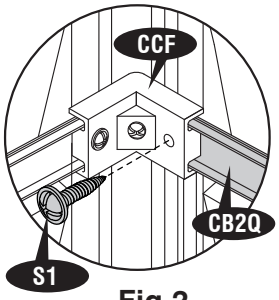

Fig.2

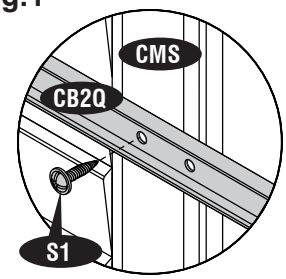

Fig.3

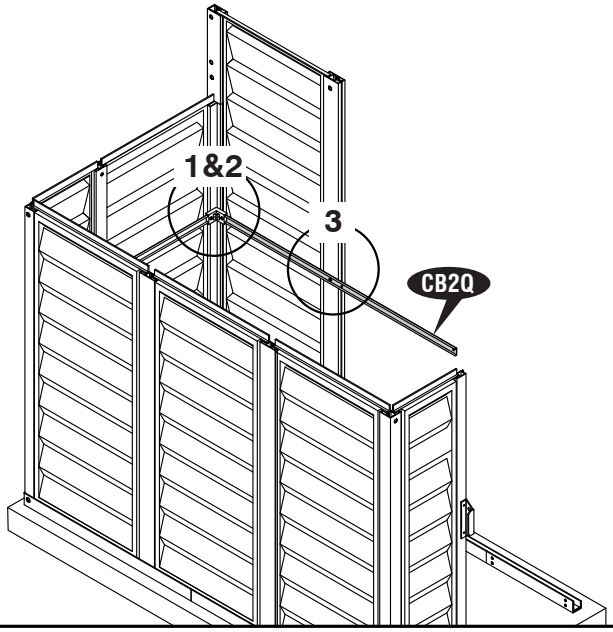

21

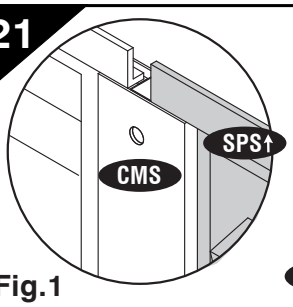

Fig.1

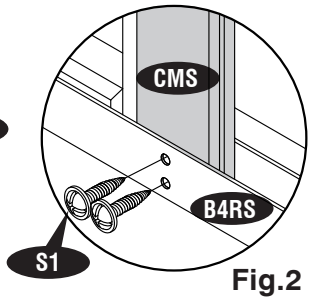

Fig.2

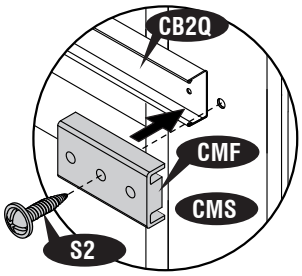

Fig.3

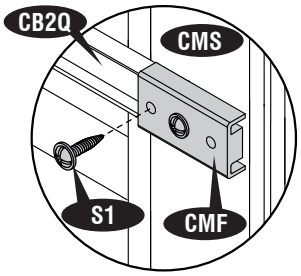

Fig.4

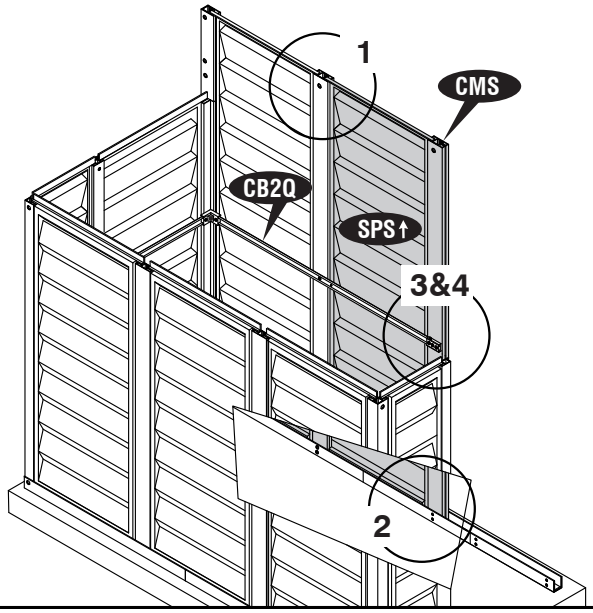

22

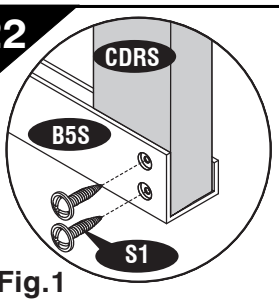

Fig.1

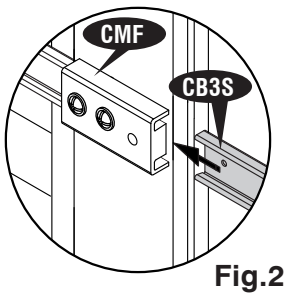

Fig.2

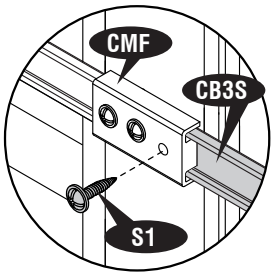

Fig.3

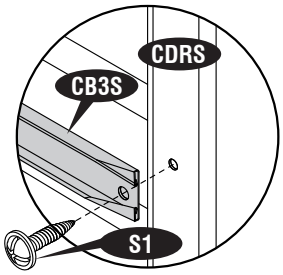

Fig.4

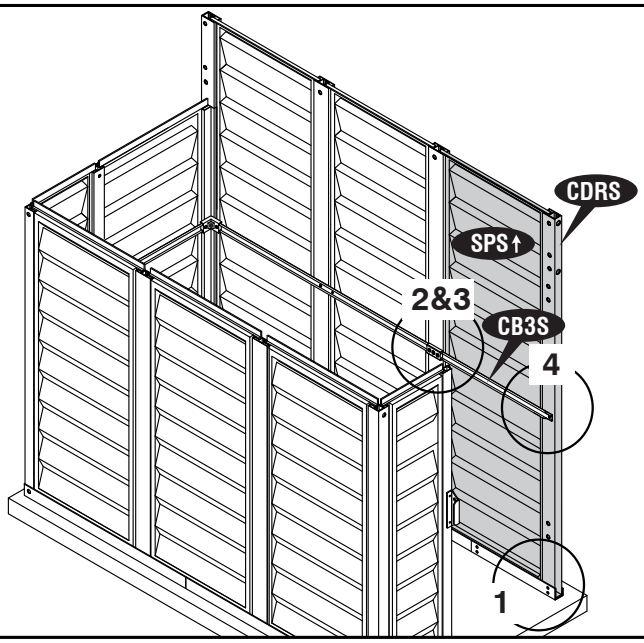

23

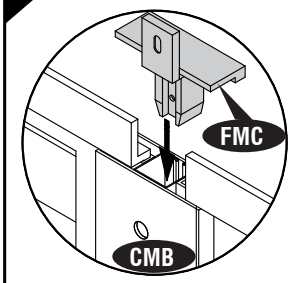

Fig.1

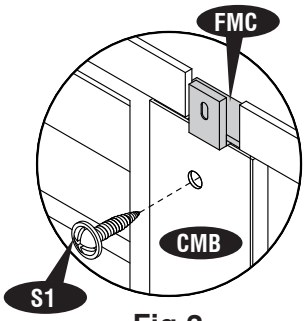

Fig.2

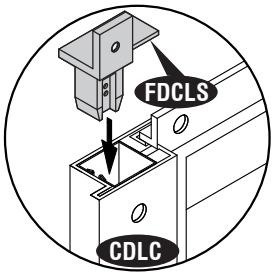

Fig.3

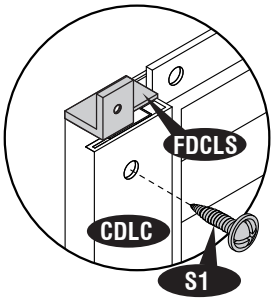

Fig.4

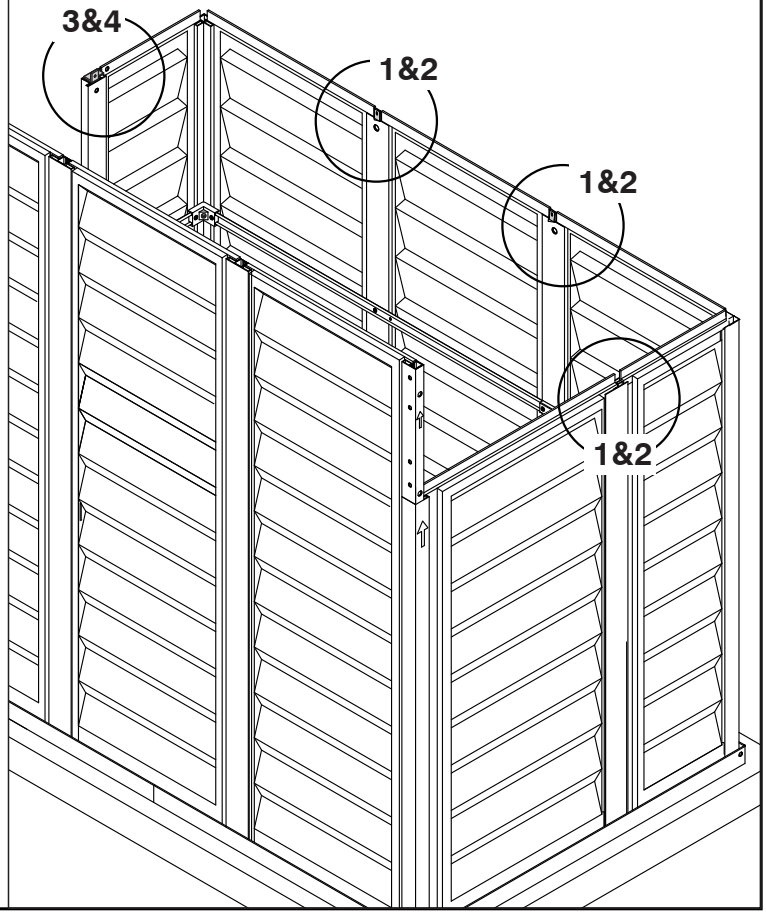

24

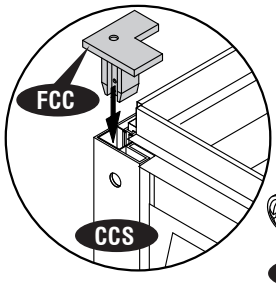

Fig.1

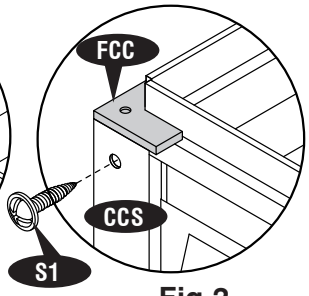

Fig.2

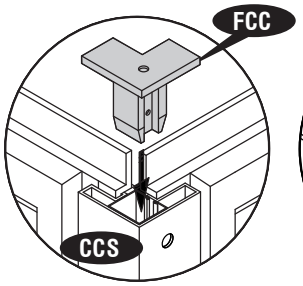

Fig.3

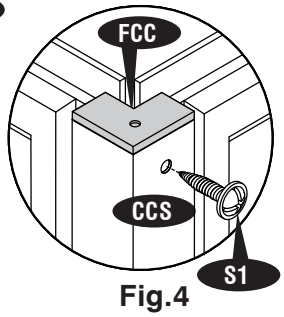

Fig.4

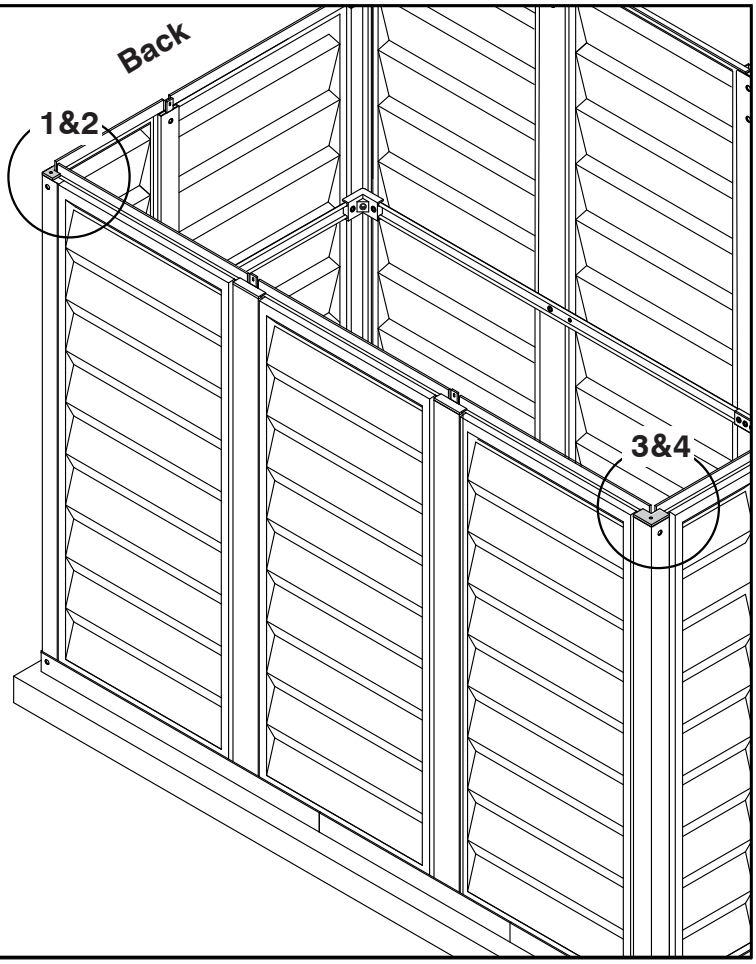

25

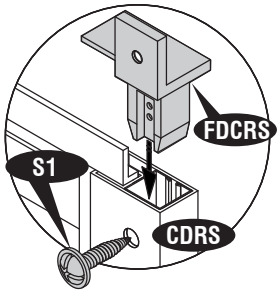

Fig.1

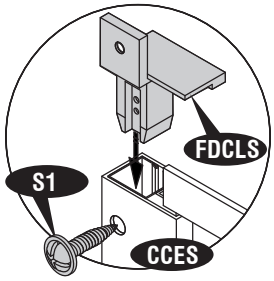

Fig.2

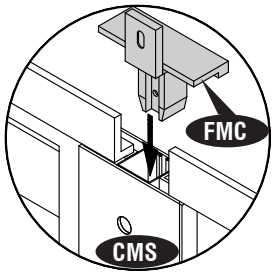

Fig.3

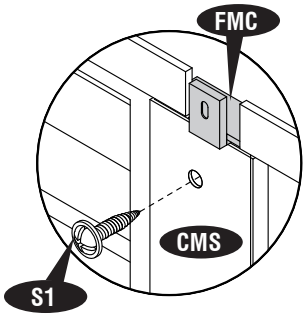

Fig.4

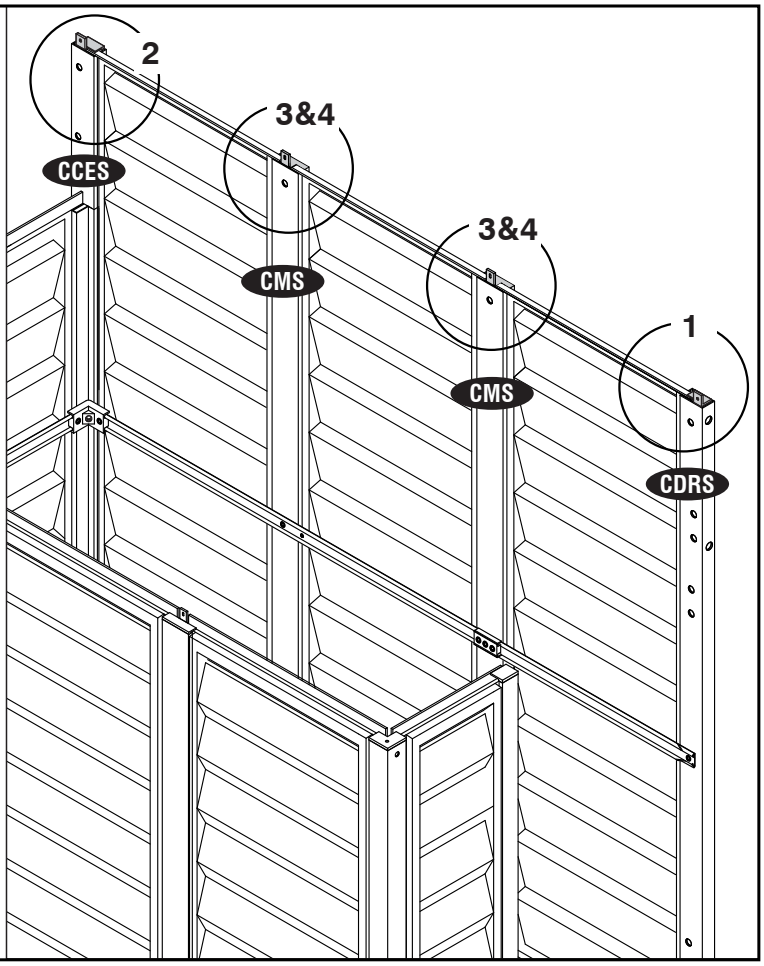

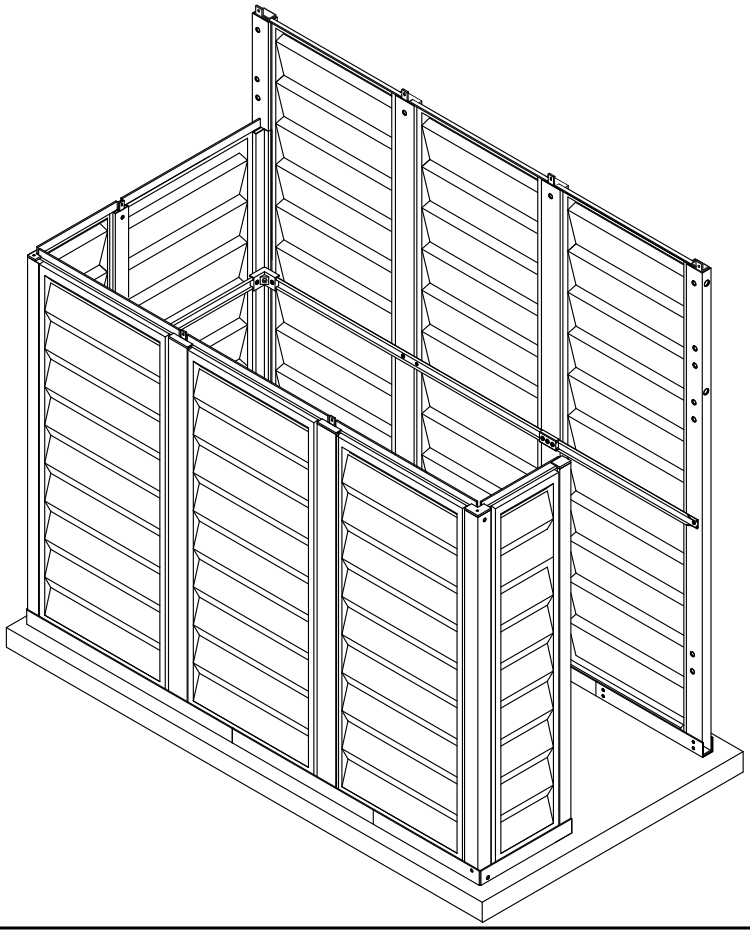

C. Roof Structure

Parts Needed:

CODE	QTY	CODE	QTY
RS1S	2	RS5S	1
RS2FS	1	RS6S	1
RS2BS	1	RS9B	2
RS4S	2	DSHC	1
RS3LQ	1	FRLC	2
RS3SQ	1	MJ	2
RS3LS	1	RJ	2
RS3SS	1	S1	54
RS14S	3	S7	11
		S2	2

Exploded View

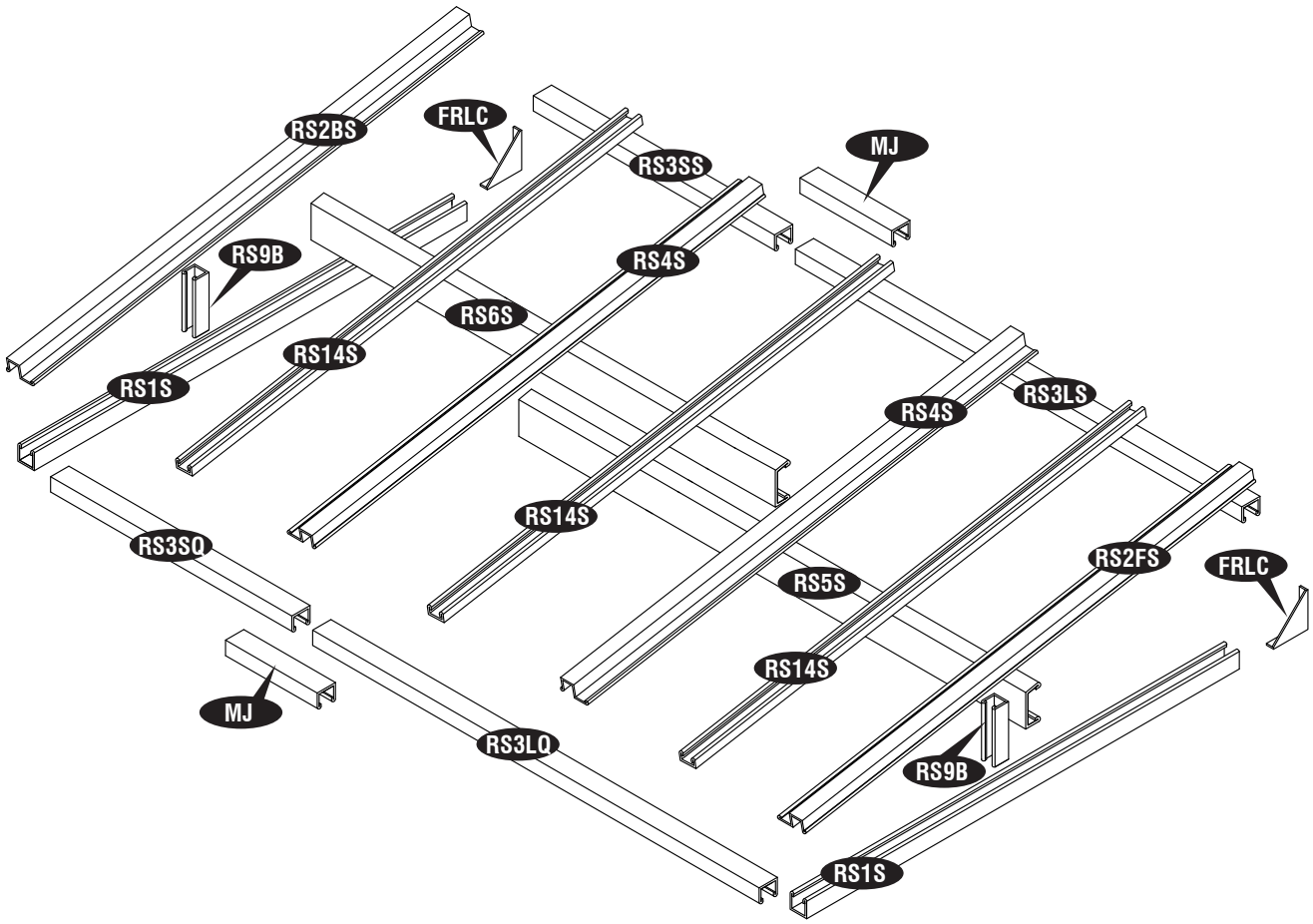

Front roof structure assembly

1

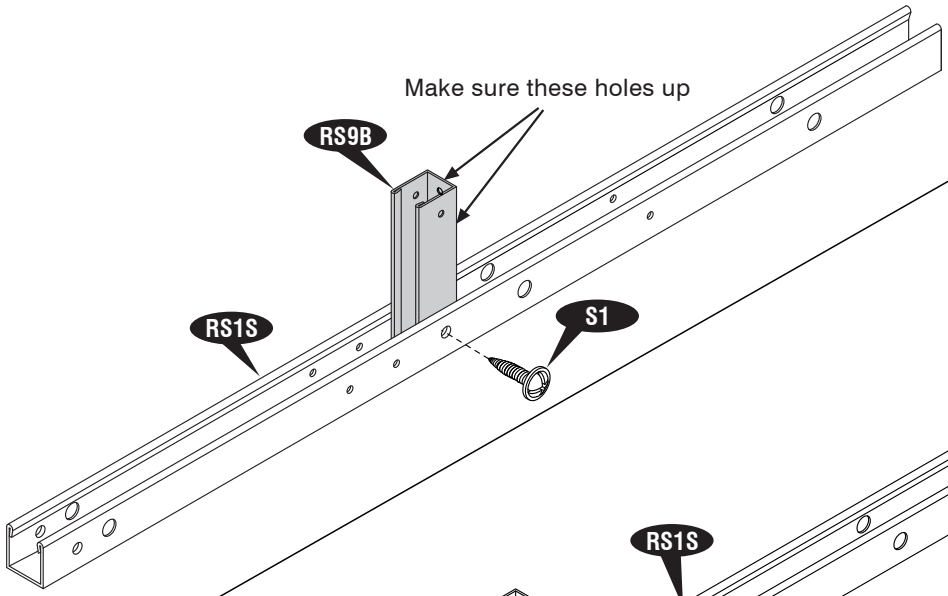

2

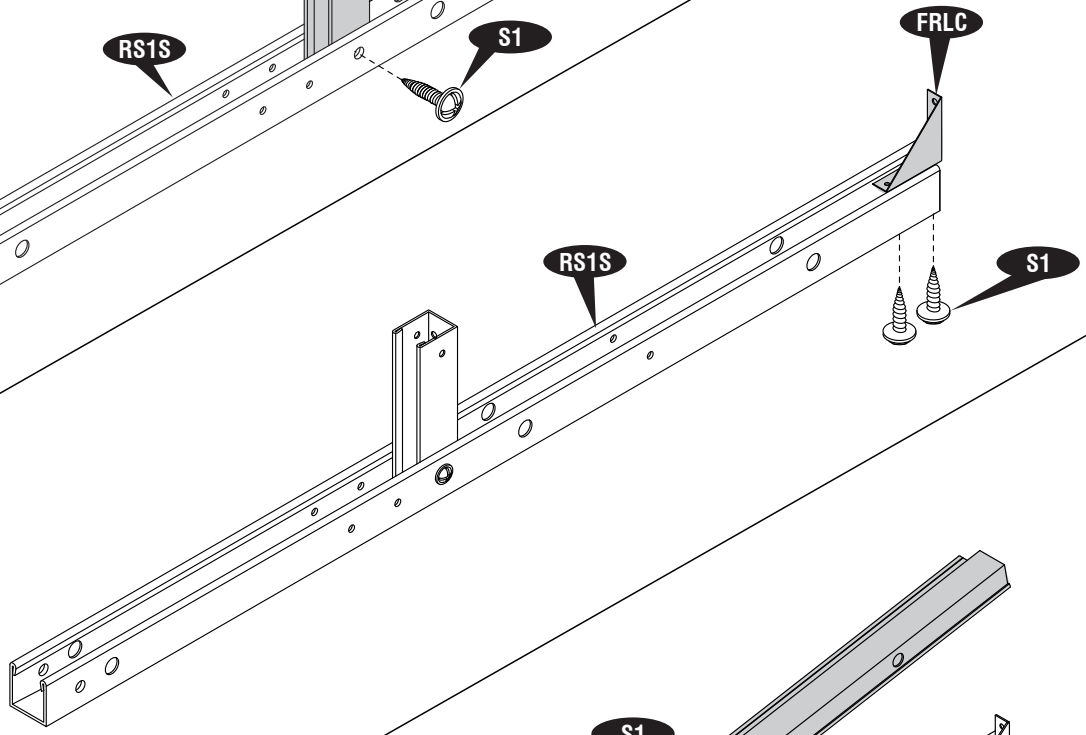

3

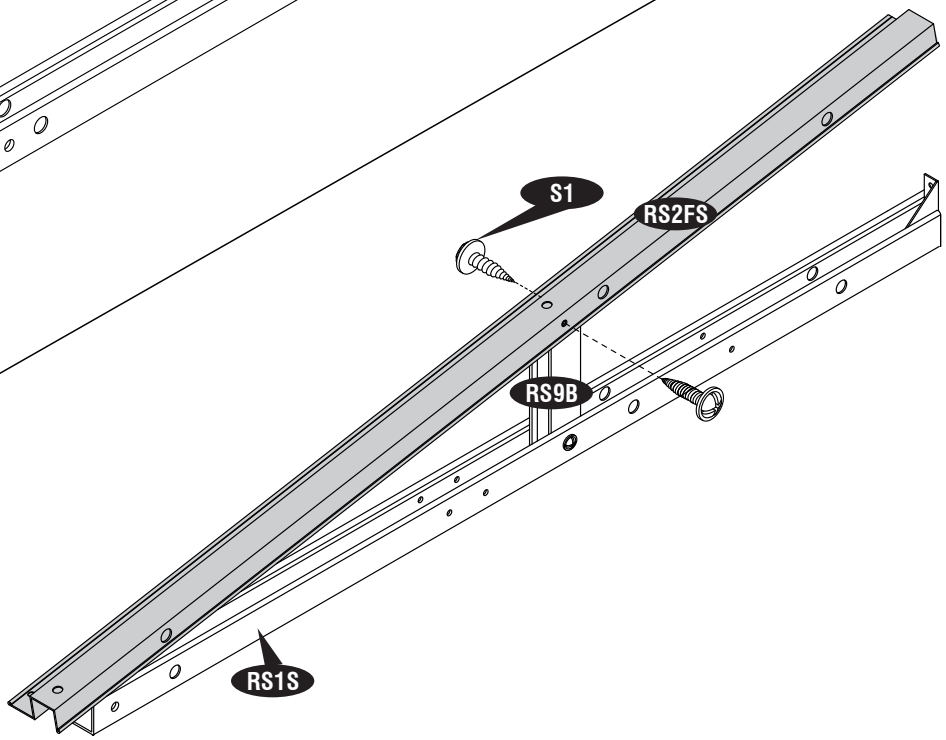

Back roof structure assembly

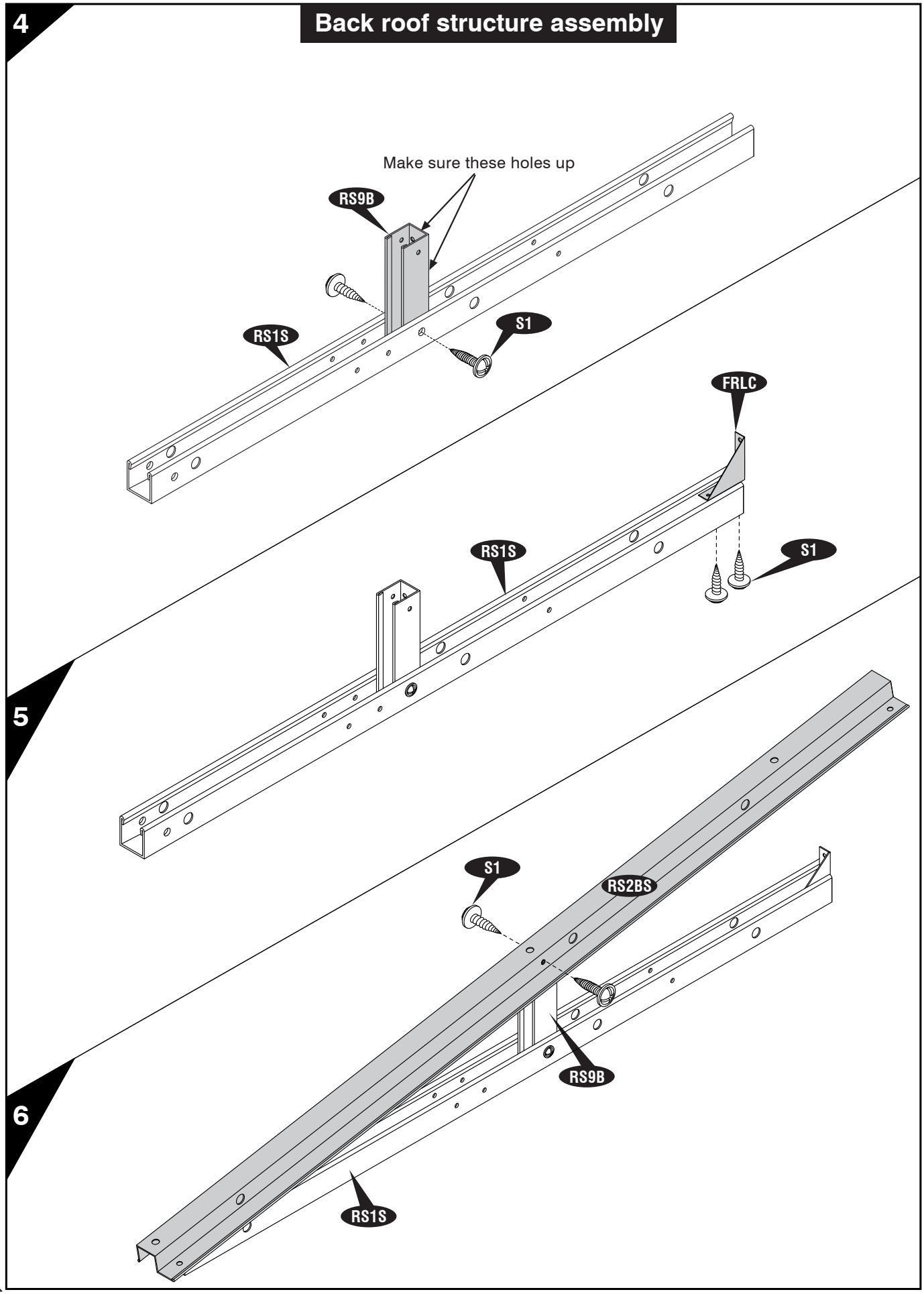

7

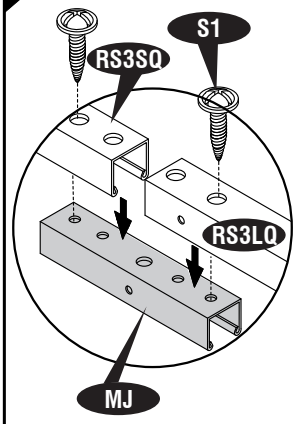

Fig.1

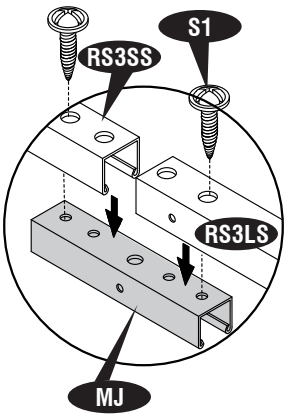

Fig.2

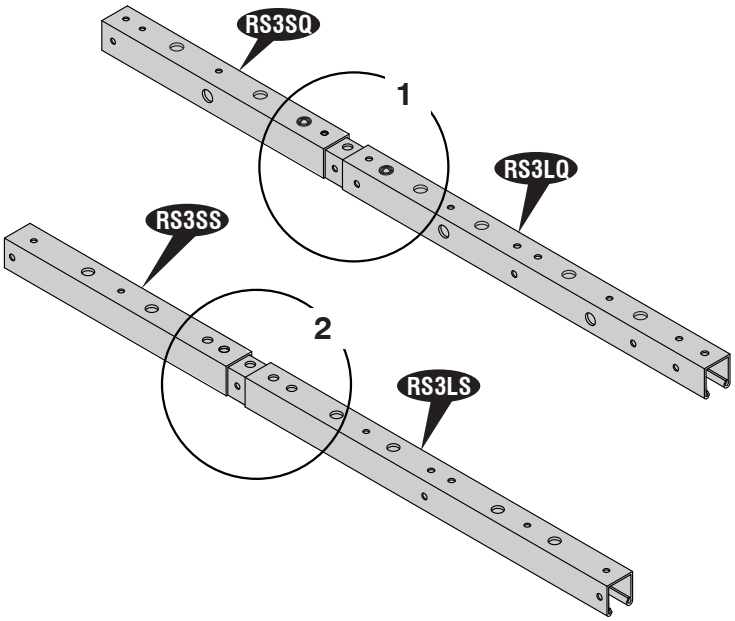

8

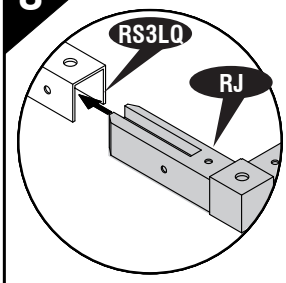

Fig.1

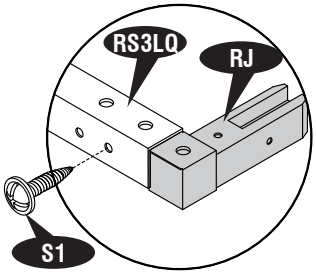

Fig.2

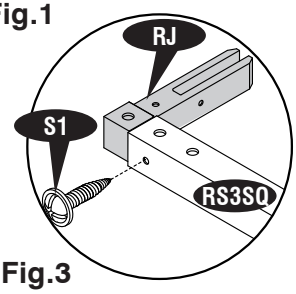

Fig.3

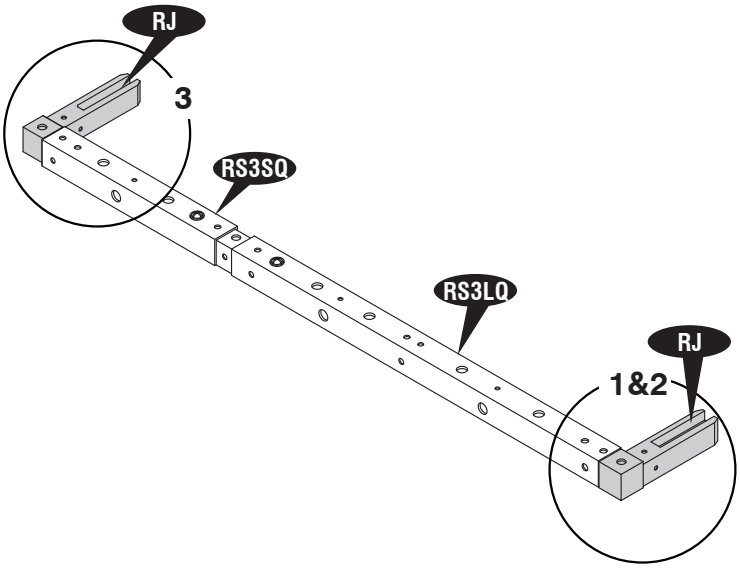

9

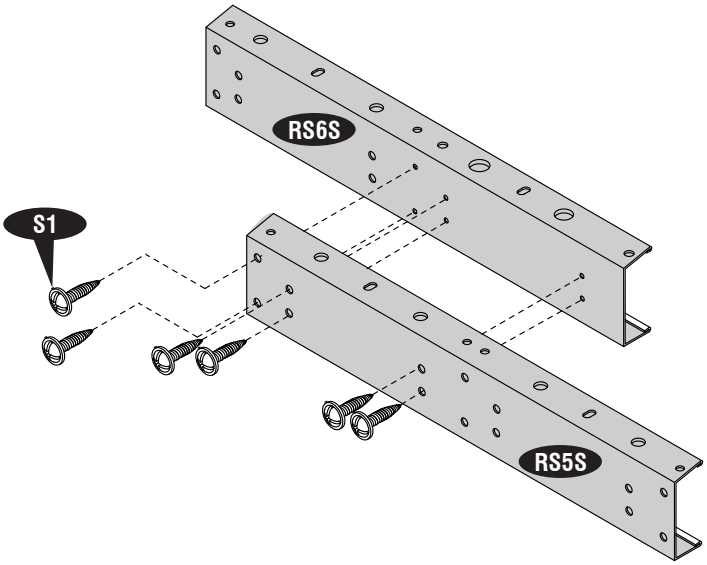

10

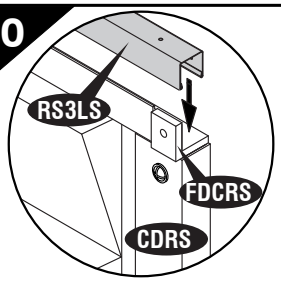

Fig.1

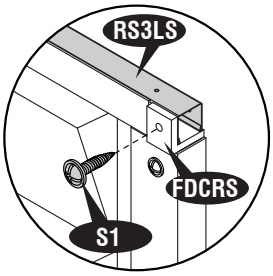

Fig.2

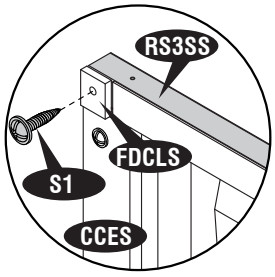

Fig.3

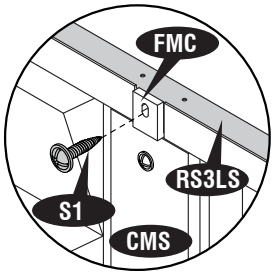

Fig.4

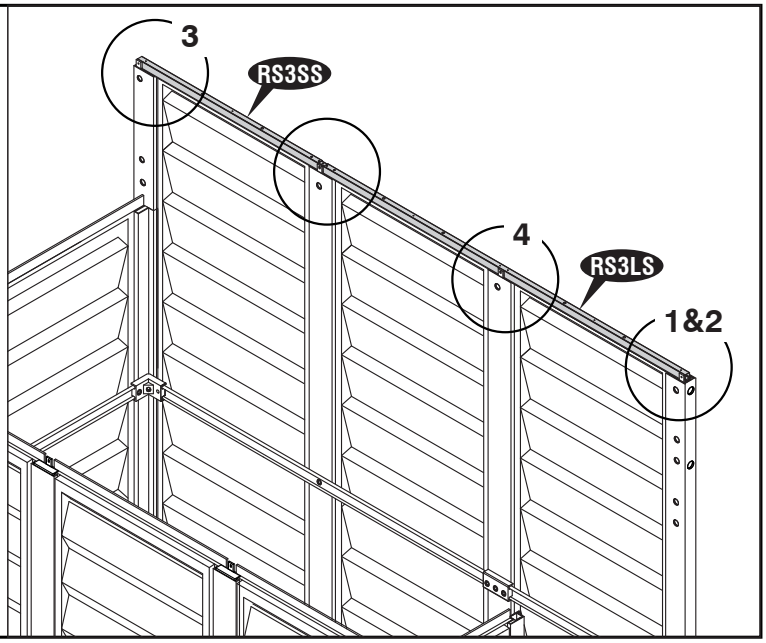

11

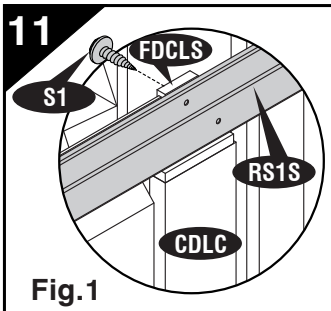

Fig.1

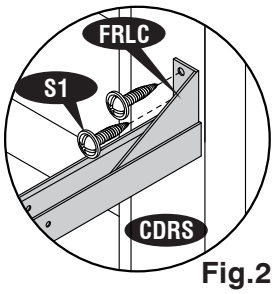

Fig.2

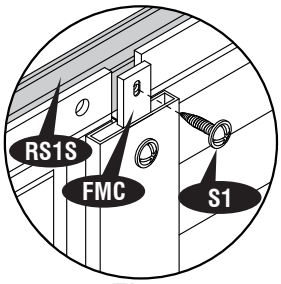

Fig.3

Fig.4

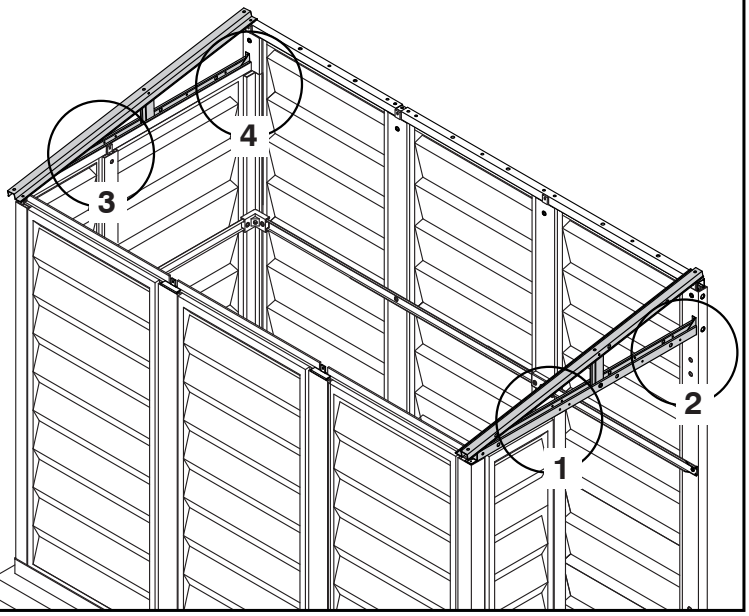

12

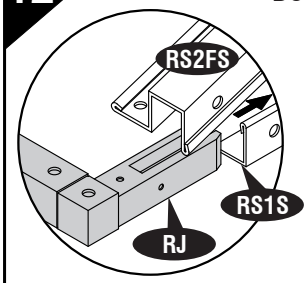

Fig.1

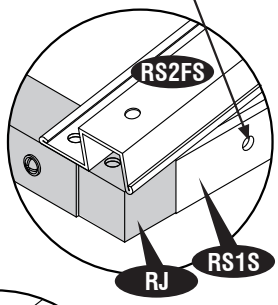

Fig.2

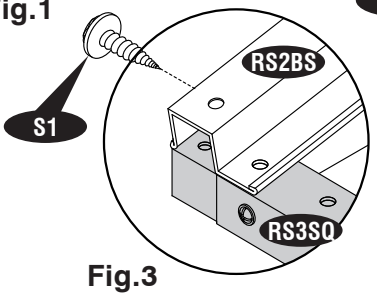

Fig.3

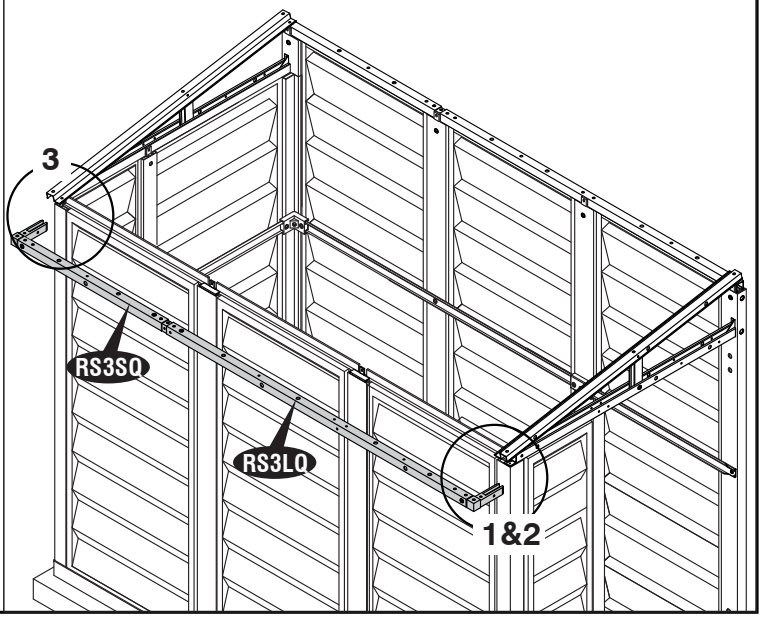

13

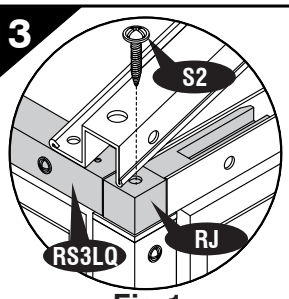

Fig.1

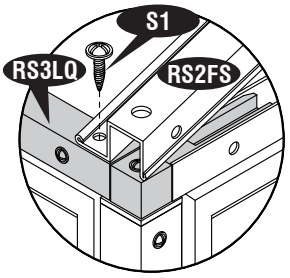

Fig.2

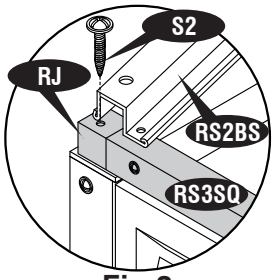

Fig.3

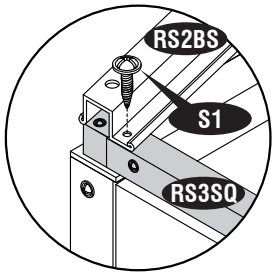

Fig.4

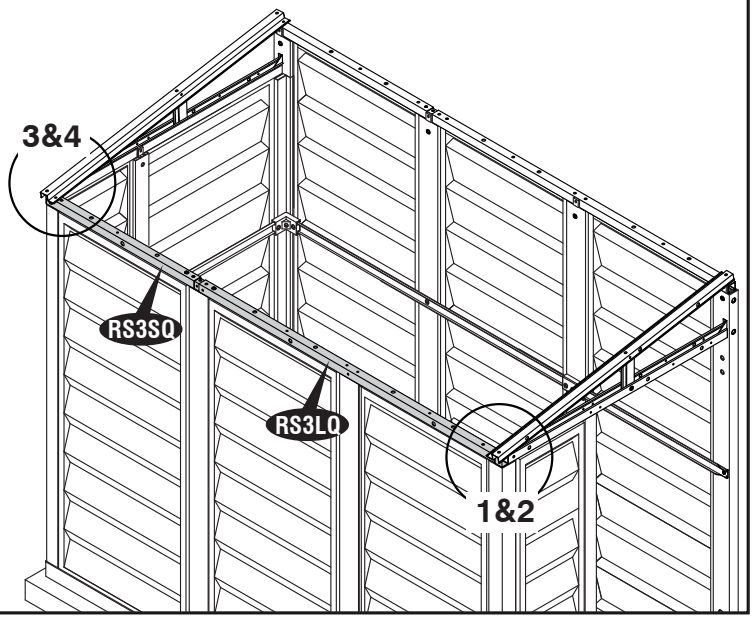

14

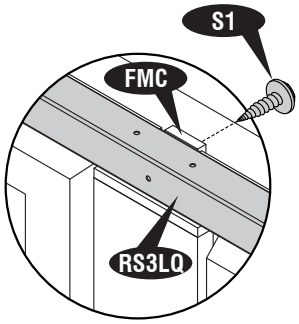

Fig.1

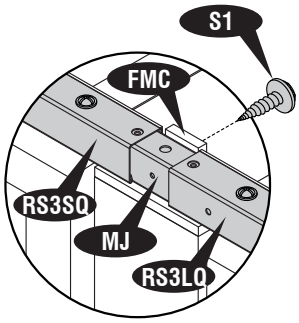

Fig.2

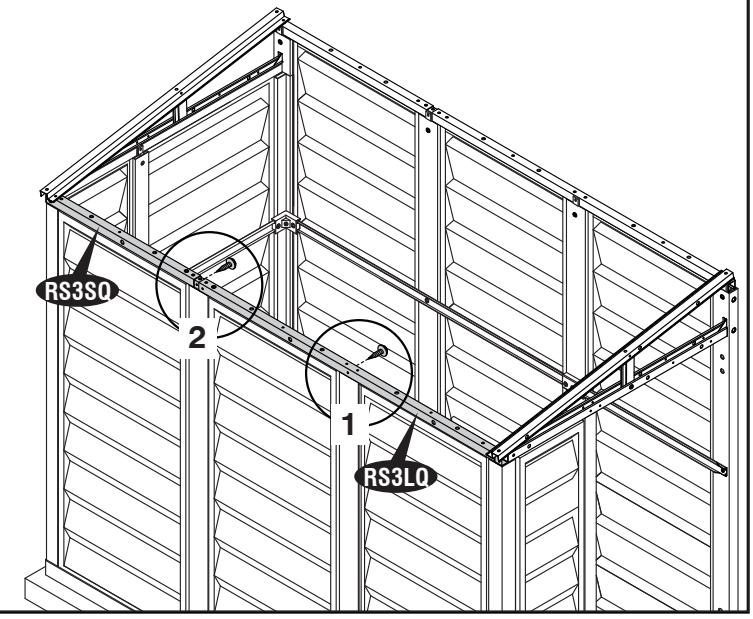

15

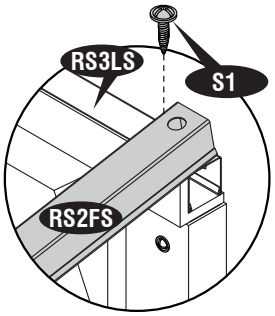

Fig.1

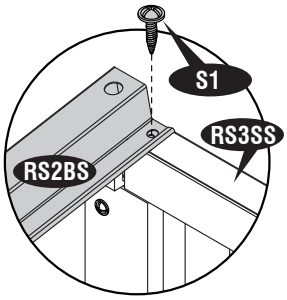

Fig.2

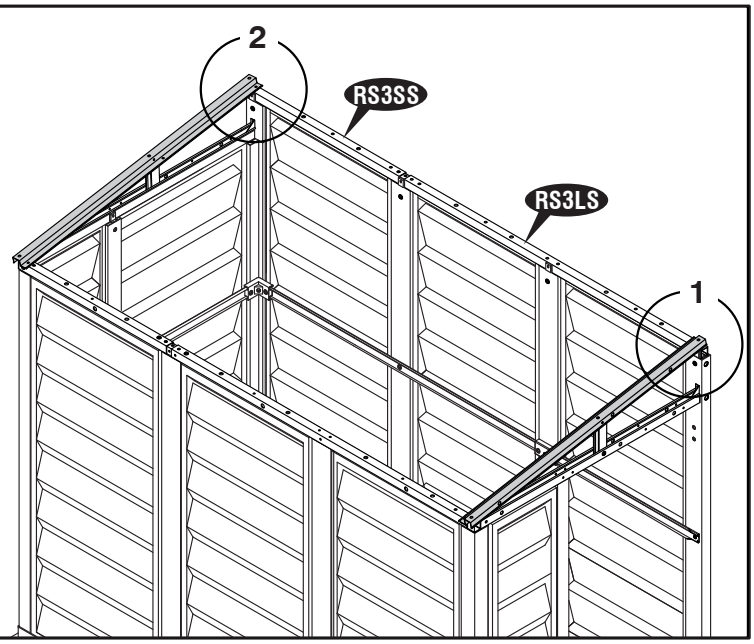

16

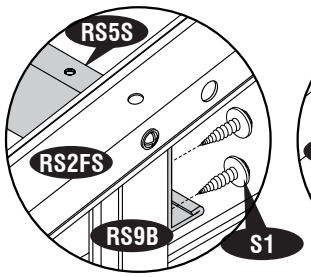

Fig.1

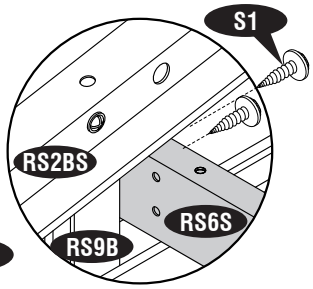

Fig.2

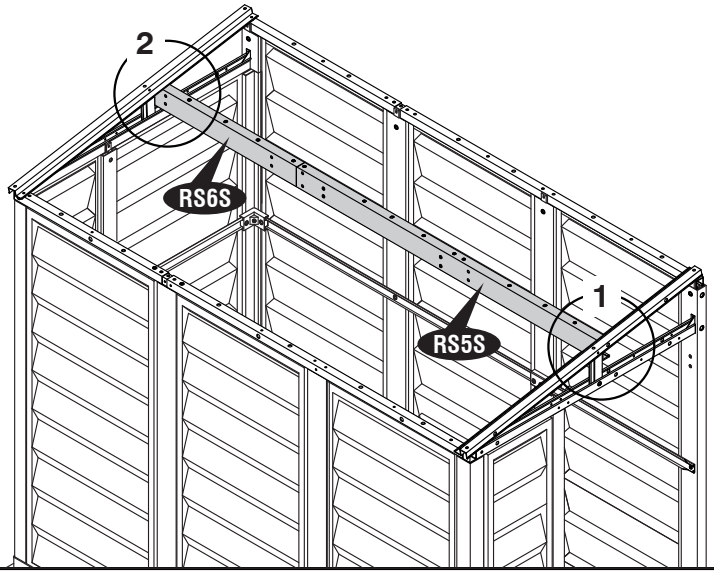

17

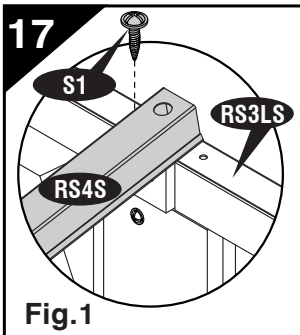

Fig.1

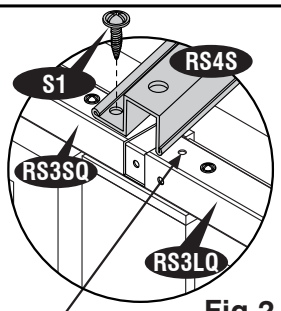

Fig.2

Do not fix this hole

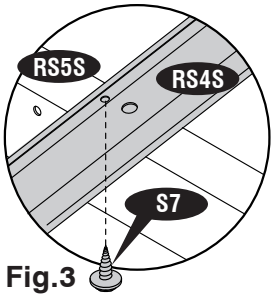

Fig.3

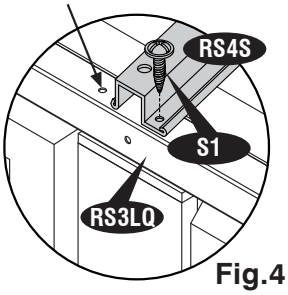

Fig.4

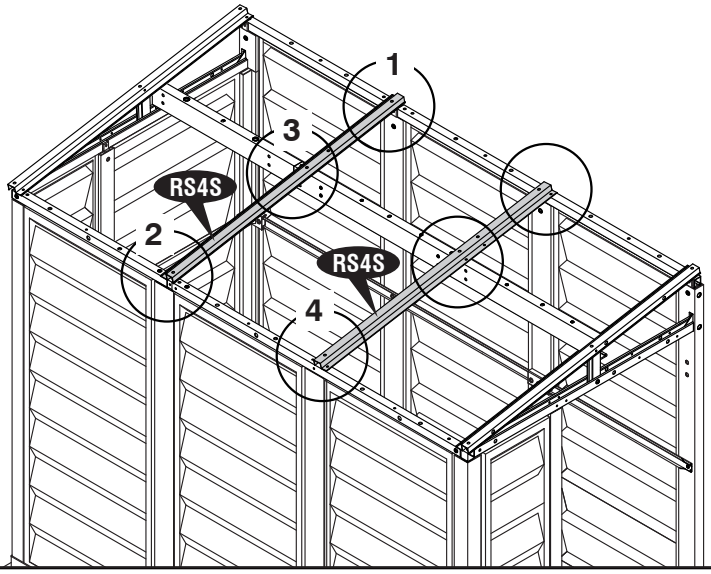

18

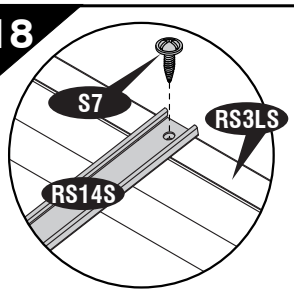

Fig.1

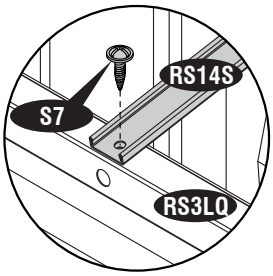

Fig.2

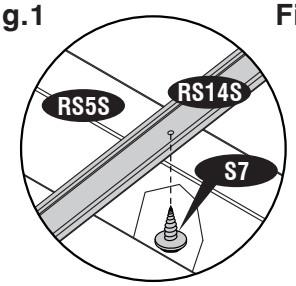

Fig.3

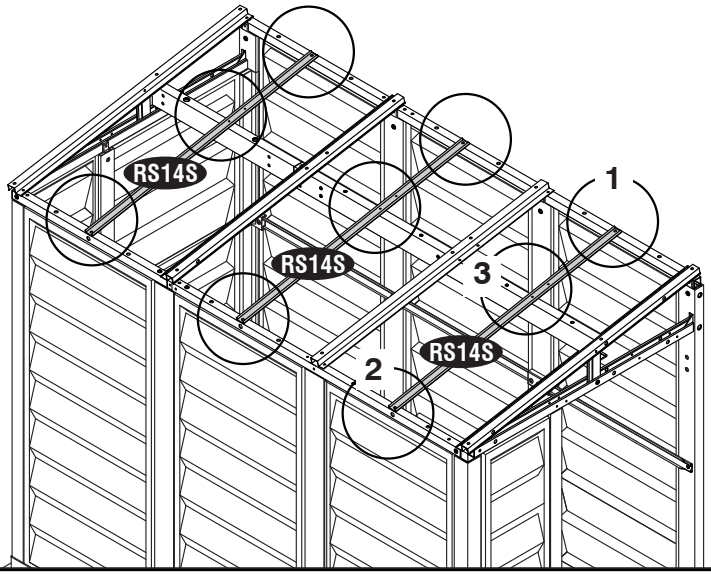

19

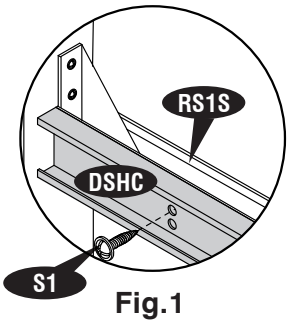

Fig.1

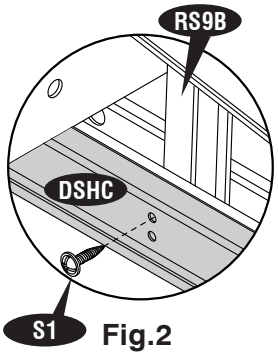

Fig.2

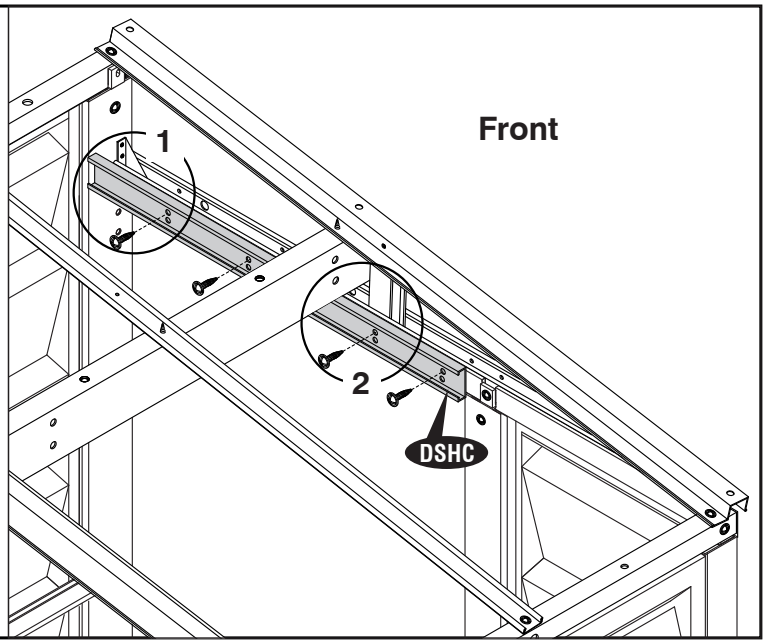

20

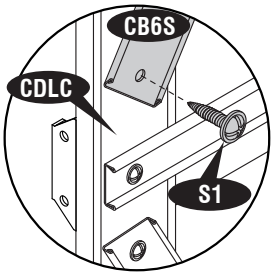

Fig.1

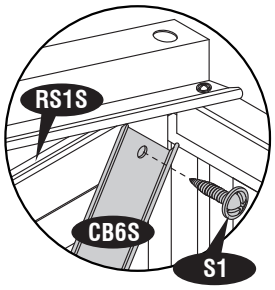

Fig.2

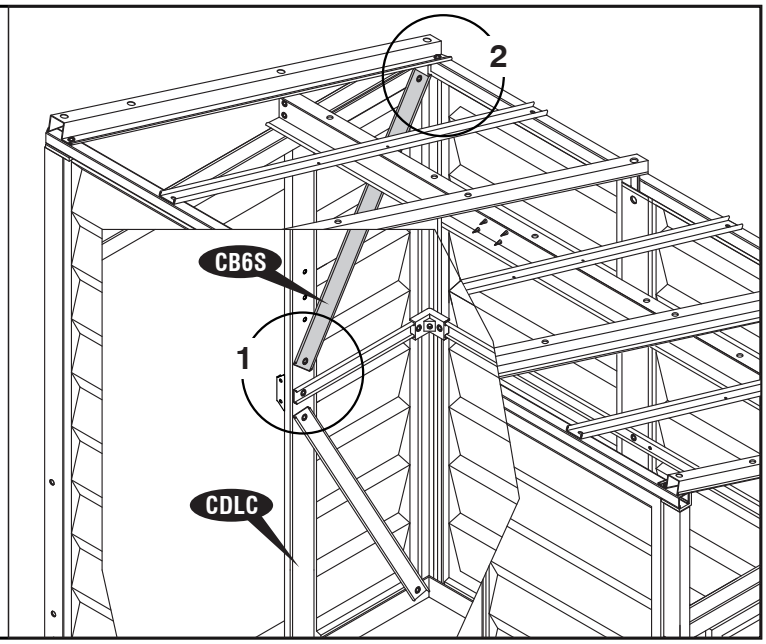

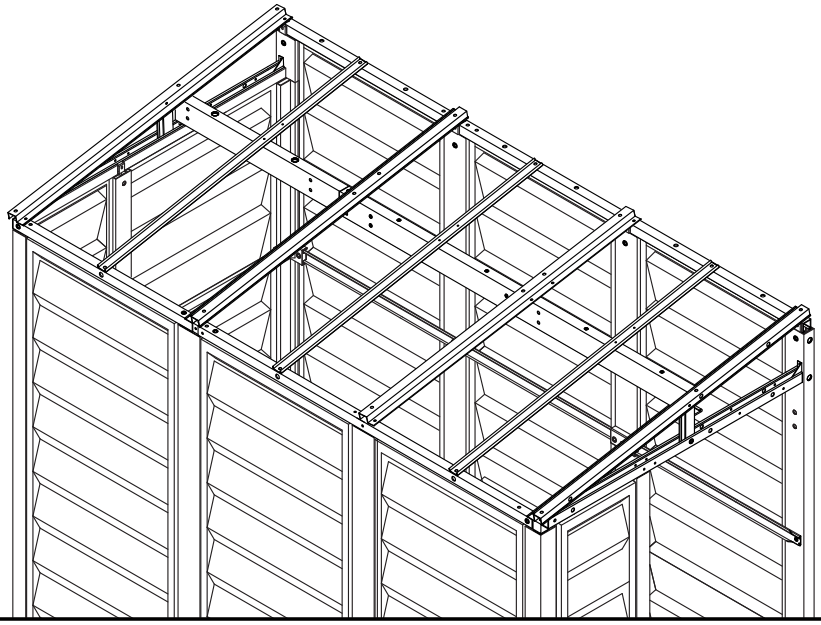

E. Roof panels

Parts Needed:

CODE	QTY	CODE	QTY
RPS↑	3	PPG	43
FPLC	1	PWS	43
FPRC	1	PIN	43
DS	1	S3	8
RSH	2	ST	1.57 meter

Note

Apply silicone into the holes before inserting the pins. This is optional and should be done for heavy rain areas if needed.

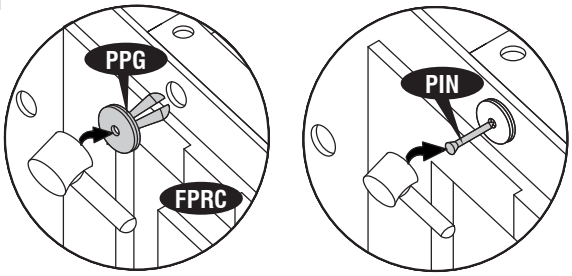

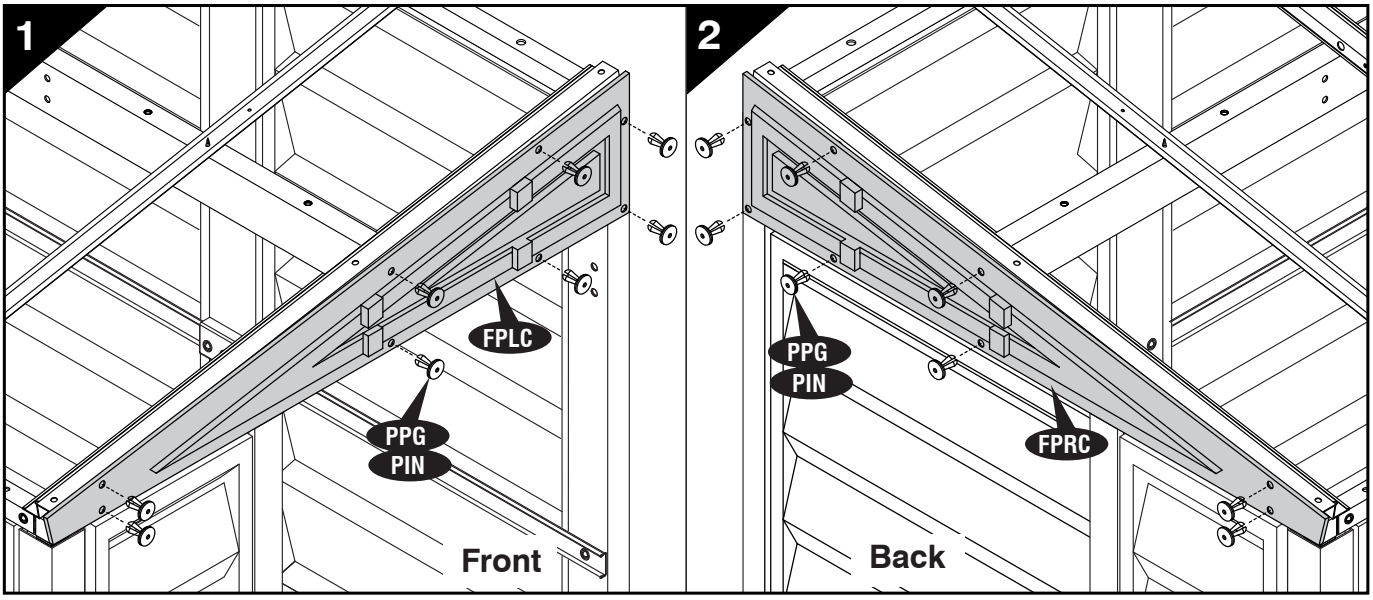

Note

Use a Screw driver to align the holes. Insert roof plugs & pins into roof panels only indicated.

Note

Apply silicone around the roof plugs. This is optional and should be done for heavy rain areas if needed.

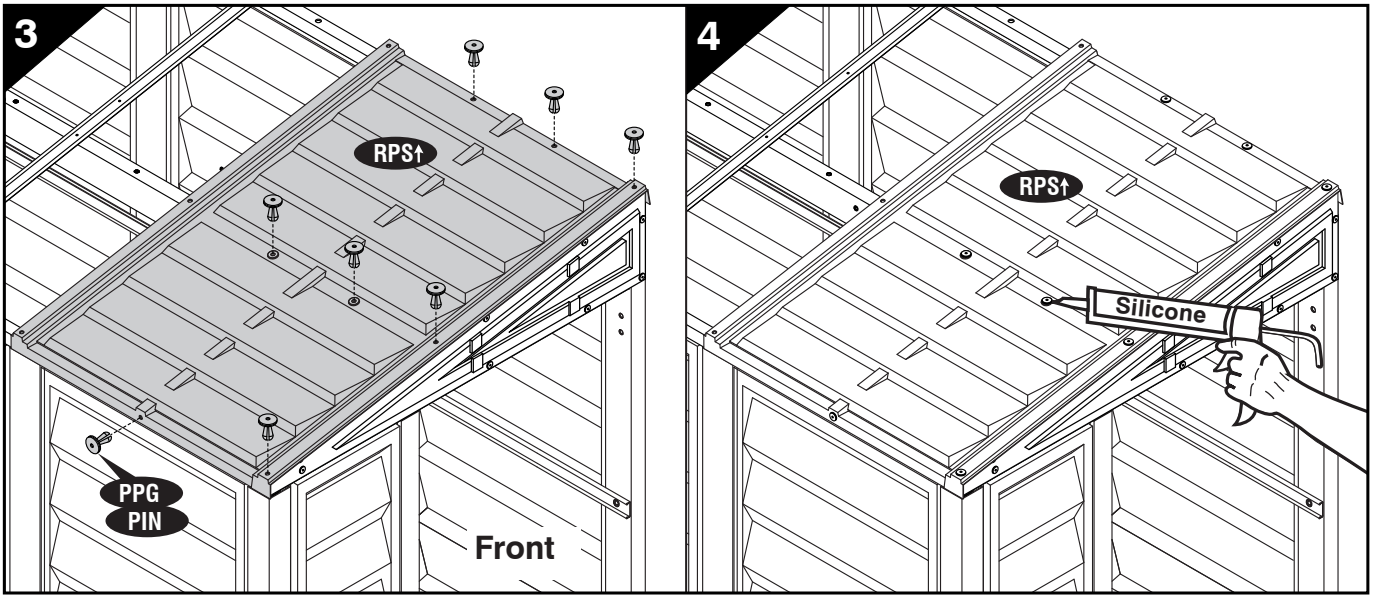

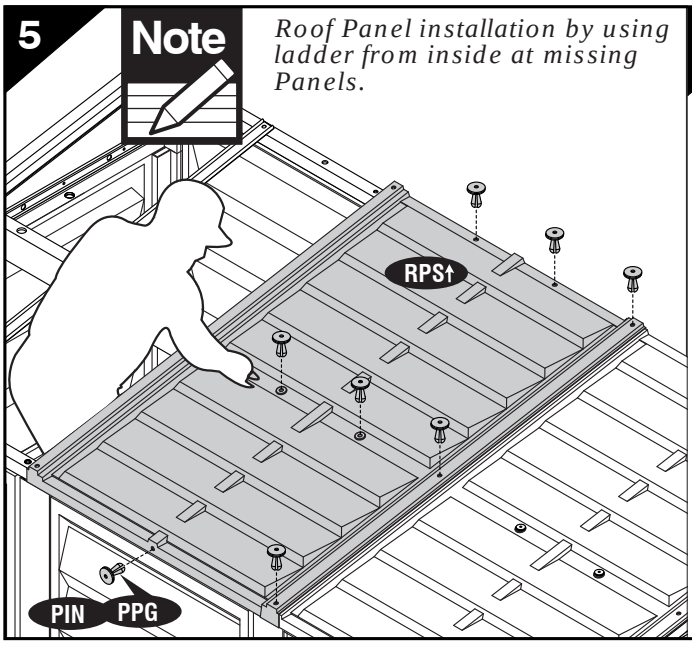
5
Note
Roof Panel installation by using ladder from inside at missing Panels.
RPS↑
PIN
PPG

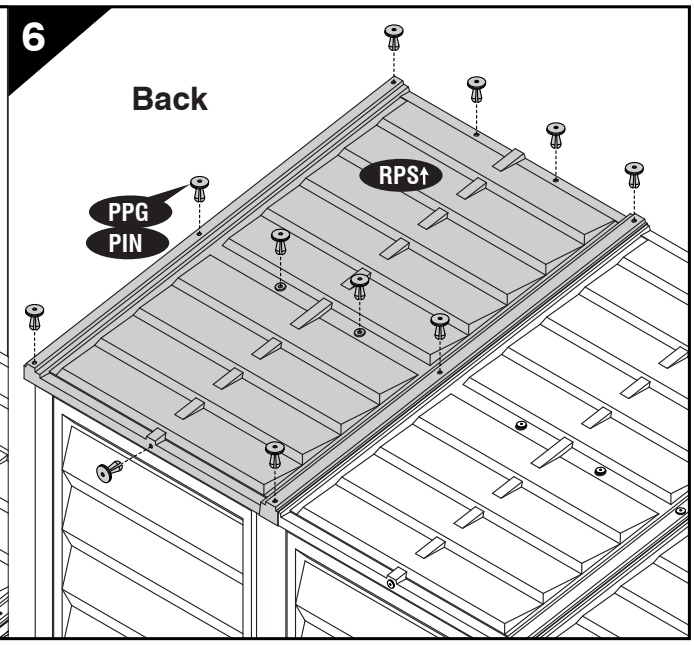
6
Back
RPS↑
PPG
PIN

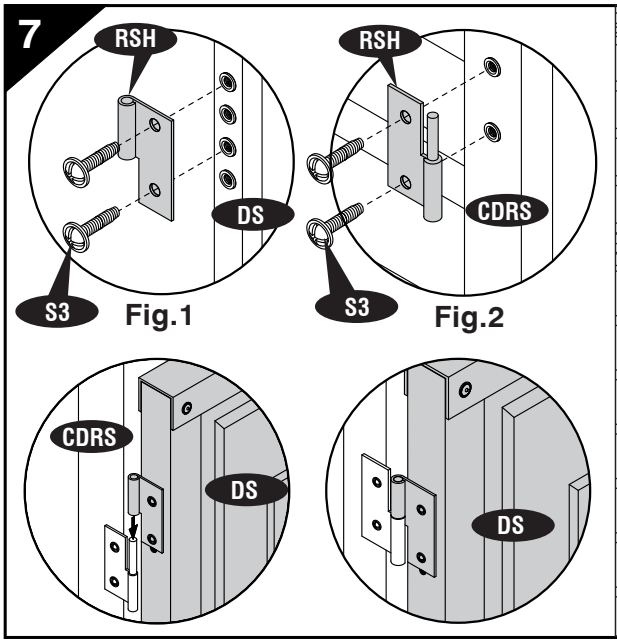
7
RSH
DS
S3
Fig.1
RSH
CDRS
S3
Fig.2
CDRS
DS
DS

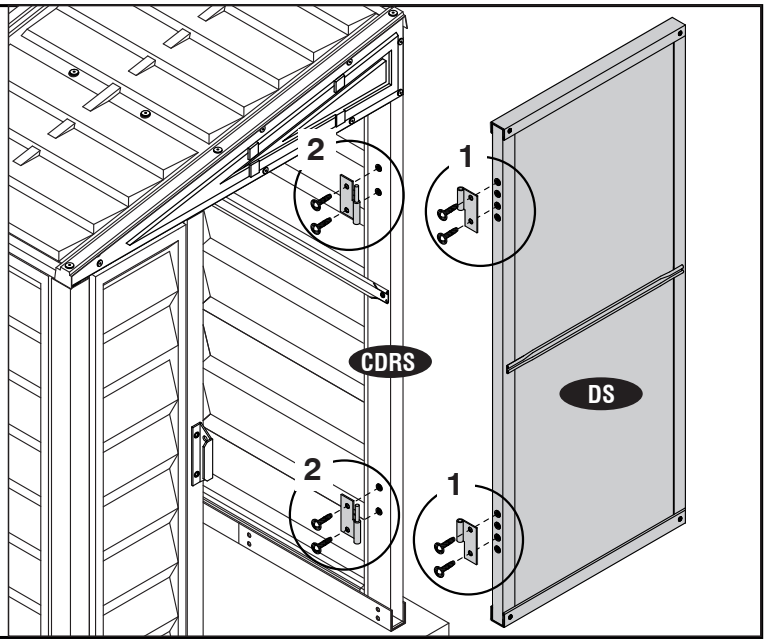
2
1
CDRS
DS
2
1

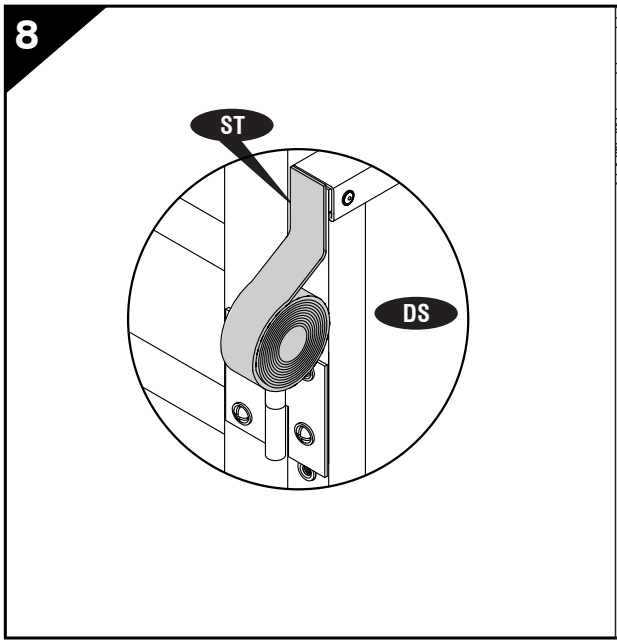
8
ST
DS

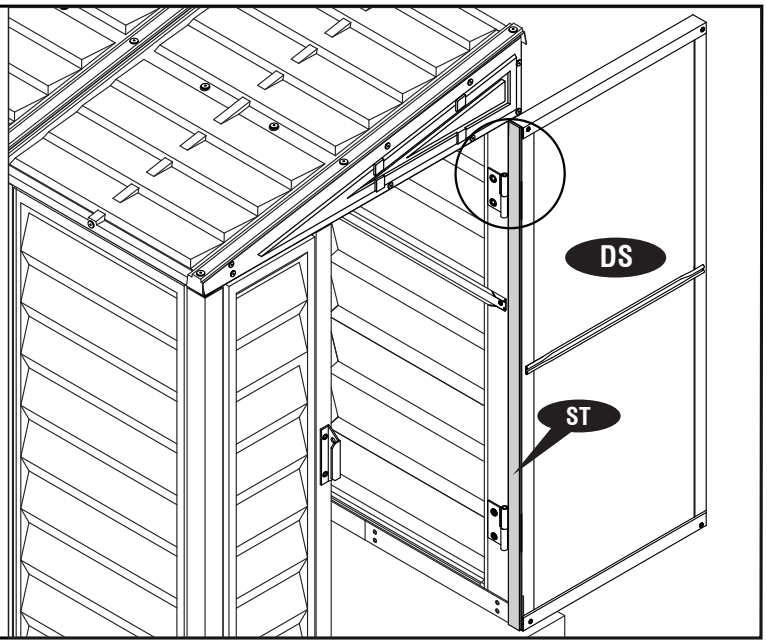
DS
ST

Note

Apply silicone around the perimeter of the base 'U' channel. Seal the corners, joints and base of door column. This is optional and should be done for heavy rain areas if needed.

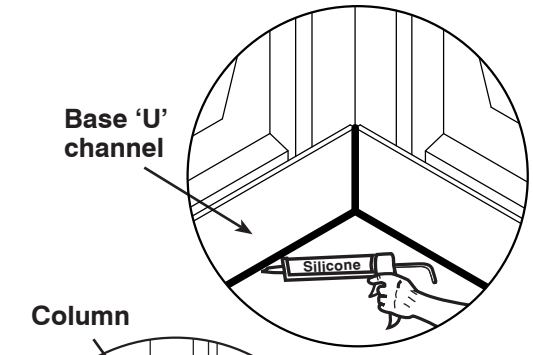

Fig.1

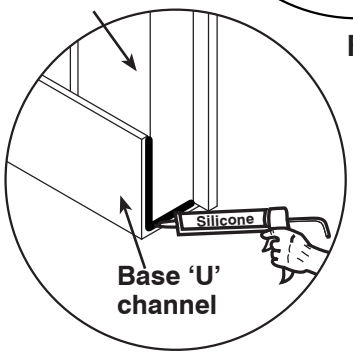

Fig.2

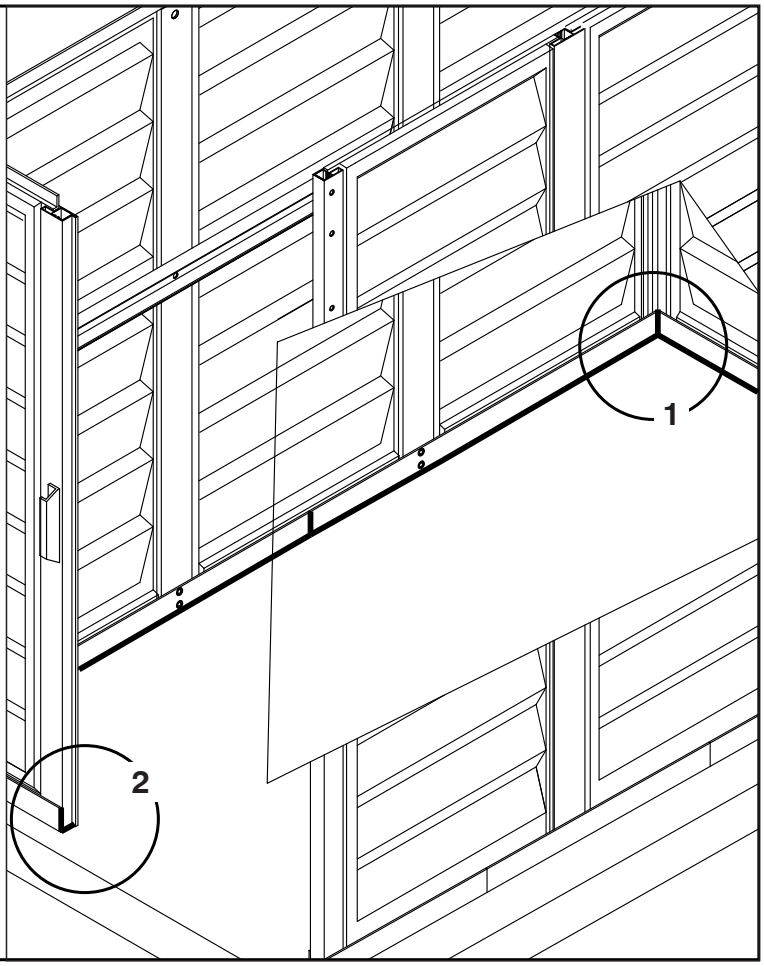

Note

For heavy rain areas, if a duramax foundation kit is not being used, you can fix a weather strip at the bottom of the door.
This is optional and the part is not included.

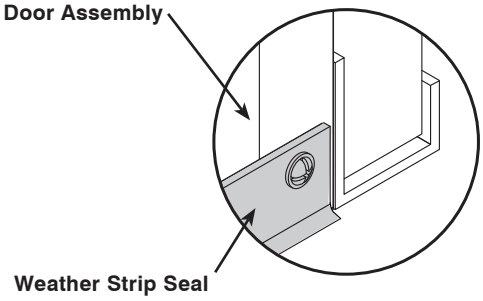

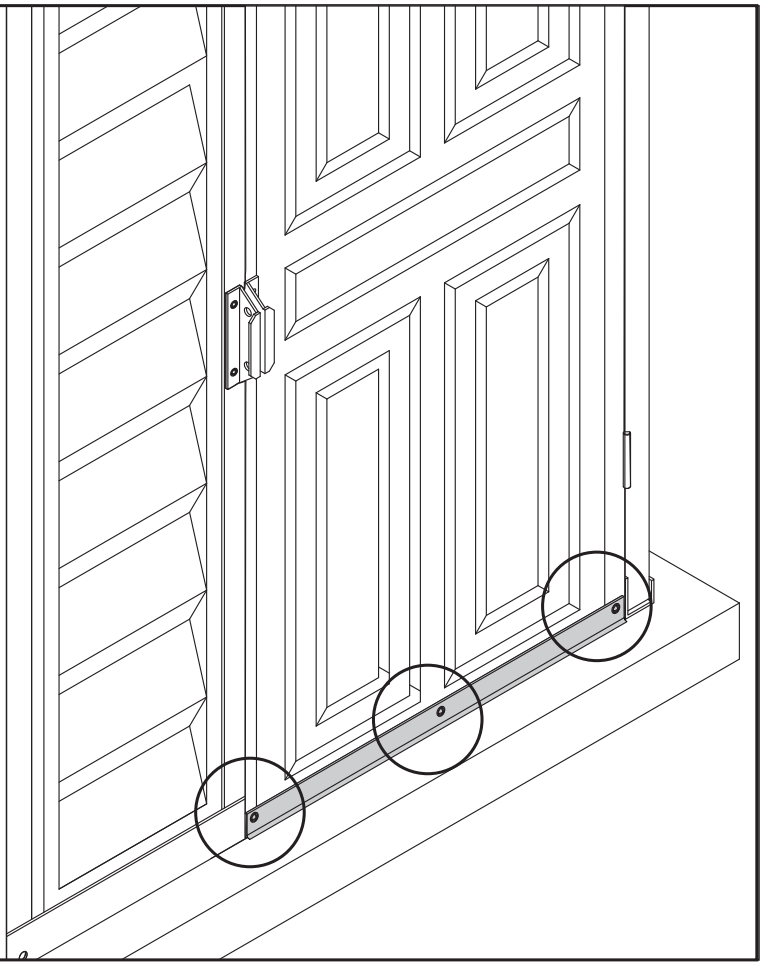

OPTION -2 LEFT SIDE DOOR.

B. Base channel.

Note

1. *It is important that these instructions are followed step by step.*
2. *All parts are clearly marked and care should be taken to use correct one.*
3. *Don't install under windy condition.*
4. *If iyou are building the shed against a wall, build it 2.5 ft. away then slide it in.*

Parts Needed:

CODE	QTY	CODE	QTY
B1LS	1	B4LS	1
B1RS	1	B4RS	1
B21Q	1	B5S	1
B22Q	1	S1	24
B3S	1		

1

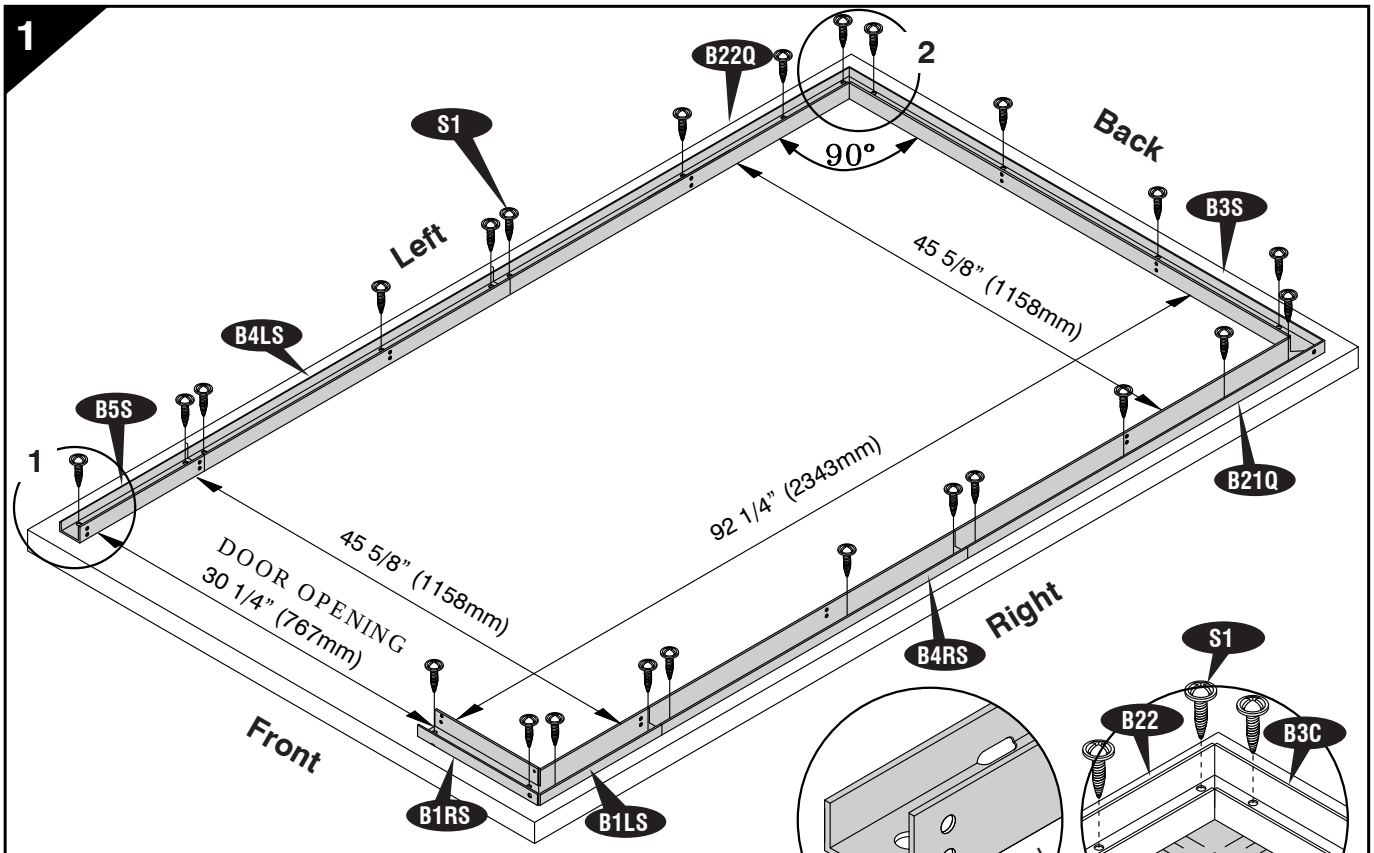

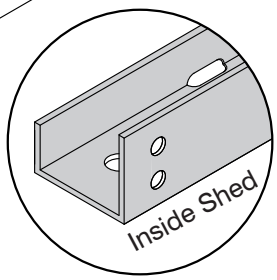

Fig.1

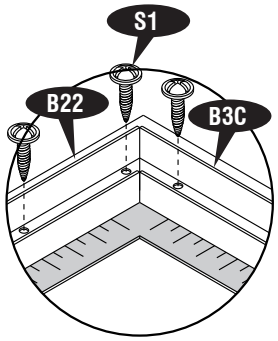

Fig.2

Note

Measure in all direction as shown in figure to make the base channel assembly in a perfect.

Assembly on concrete foundation

Using a carpenter square, line up corners. Align base bars, mark the concrete at the holes in the base and drill concrete with suitable concrete bit to accept 1/4" x 1 1/2" (M6 x 40mm) anchor bolts.
(Qty - 24Nos. not provided).

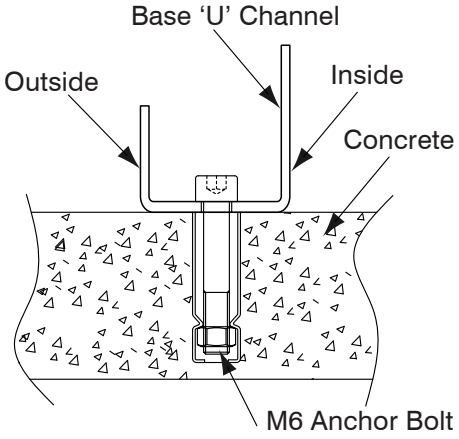

C. Walls & Columns

Note

All panels are clearly marked and care should be taken to use the correct one.

Parts Needed:

CODE	QTY	CODE	QTY
CB1S	1	CMB	3
CB2Q	2	CMS	2
CB3Q	1	CCS	2
CB2S	1	CCRS	1
CB3S	1	CCES	1
CB4S	1	CDLC	1
CB6S	1	CDRS	1
CCF	3	FSPC↑	2
CMF	2	SP↑	4
FCC	2	SPS↑	3
FMC	3	S1	47
FDCLS	1	S2	5
FDCRS	2		

1

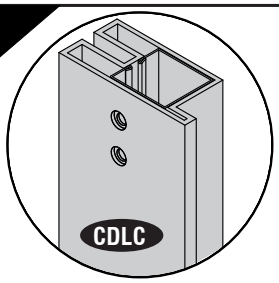

Fig.1

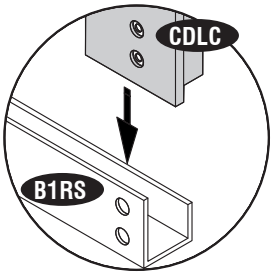

Fig.2

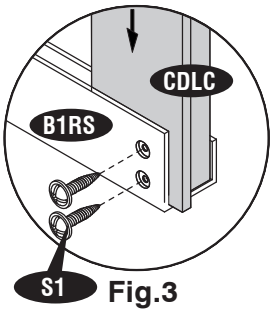

Fig.3

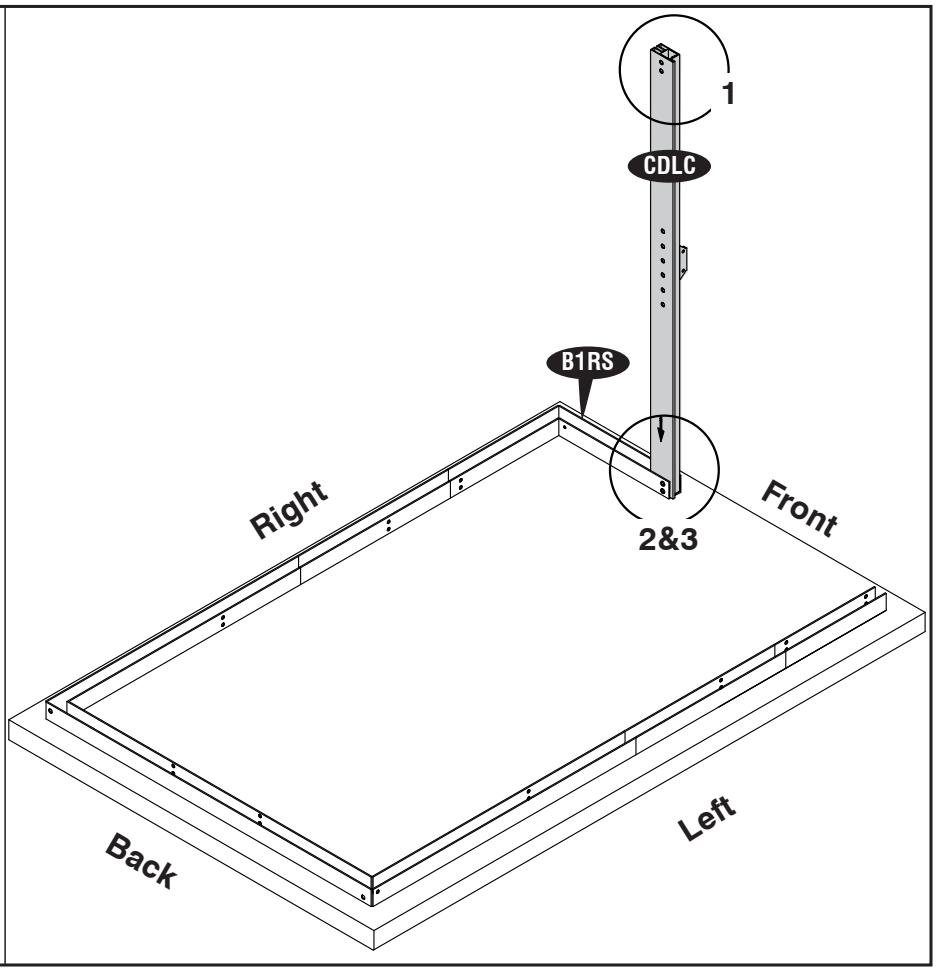

2

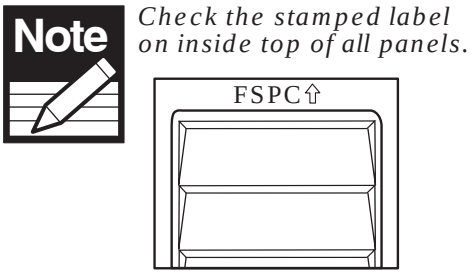

Check the stamped label on inside top of all panels.

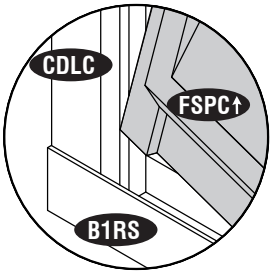

Fig.1

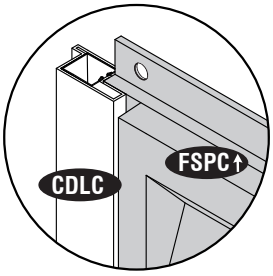

Fig.2

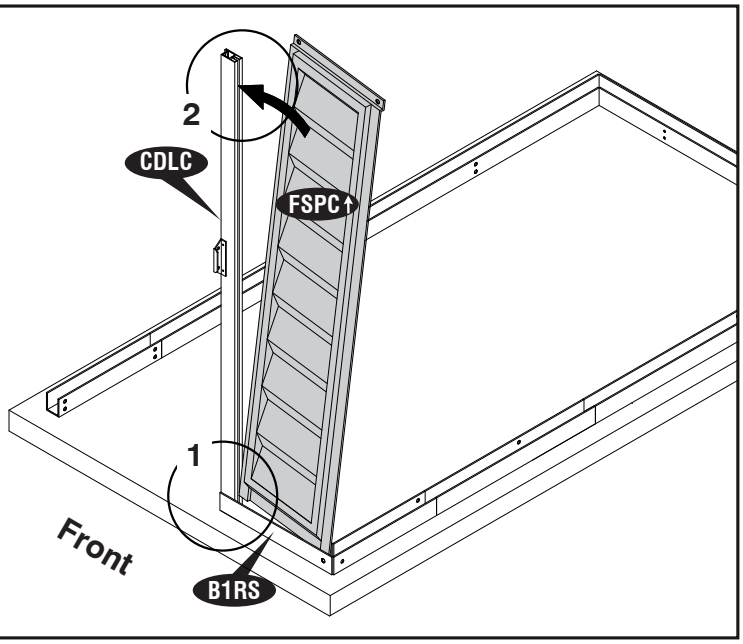

3

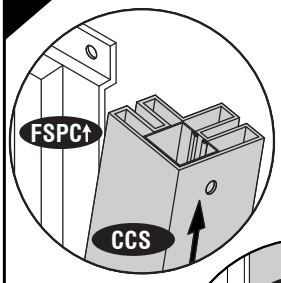

Fig.1

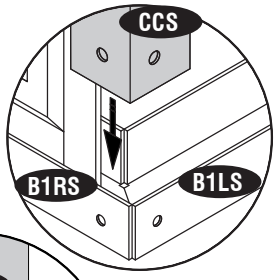

Fig.2

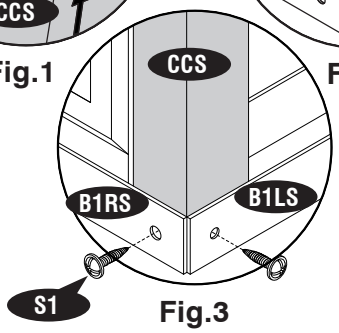

Fig.3

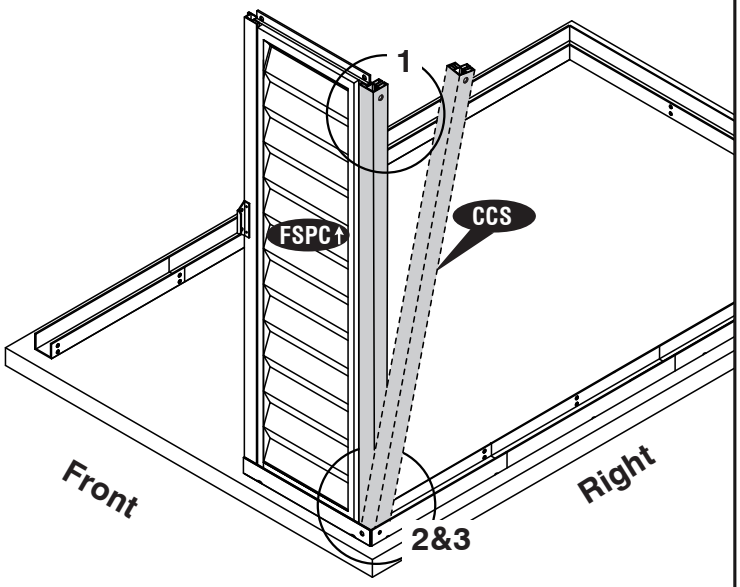

4

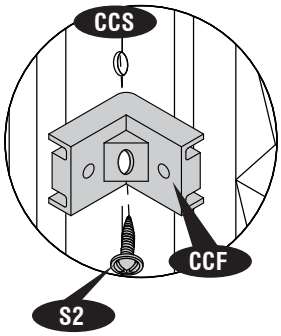

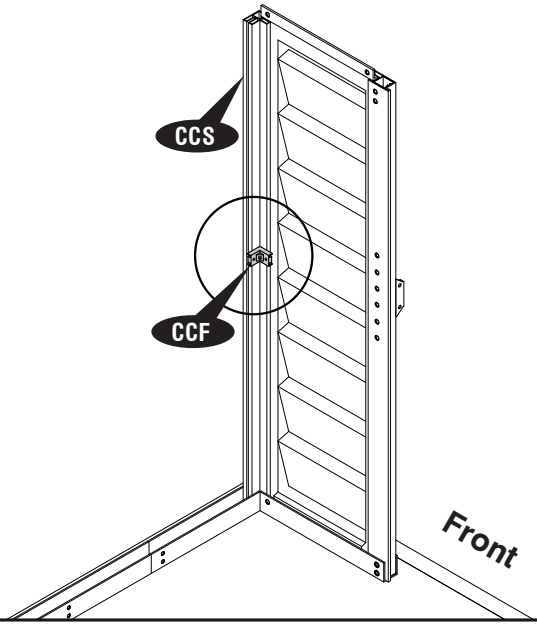

5

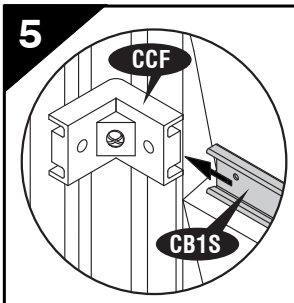

Fig.1

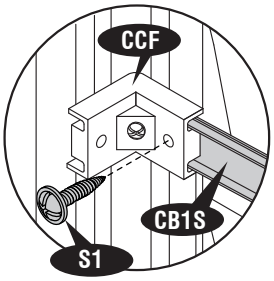

Fig.2

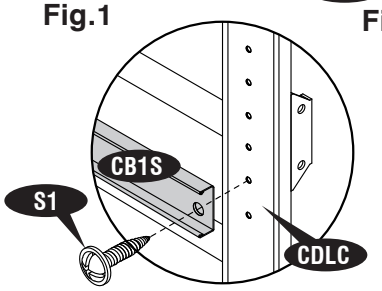

Fig.3

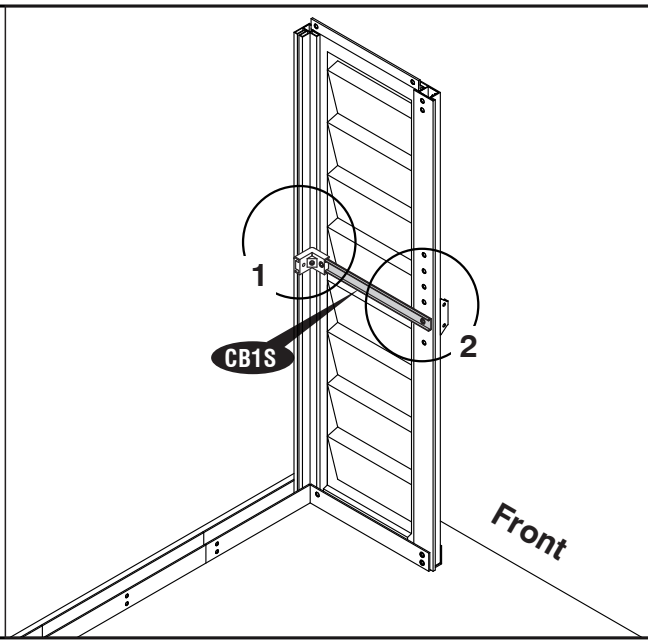

6

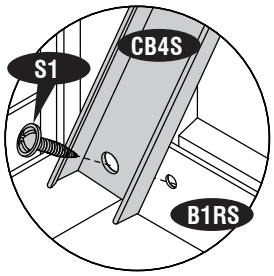

Fig.1

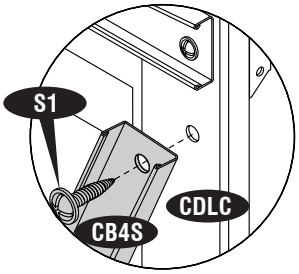

Fig.2

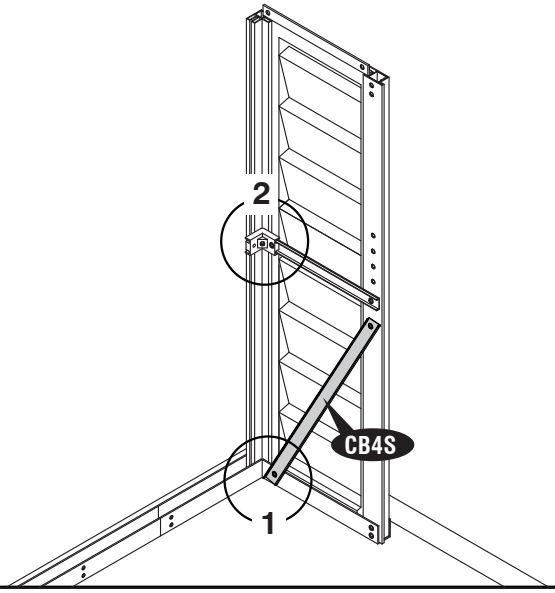

7

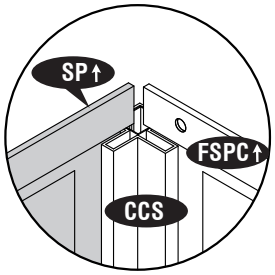

Fig.1

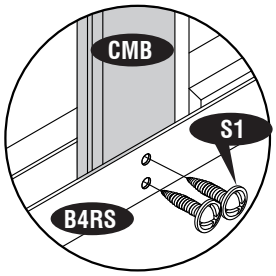

Fig.2

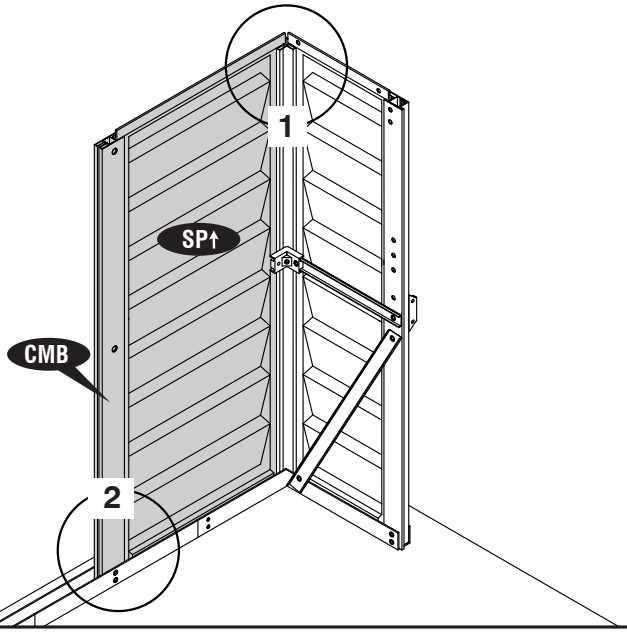

8

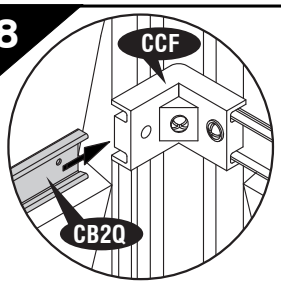

Fig.1

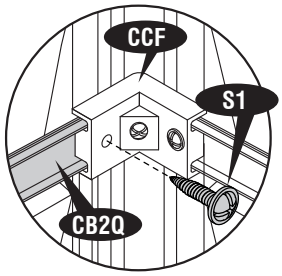

Fig.2

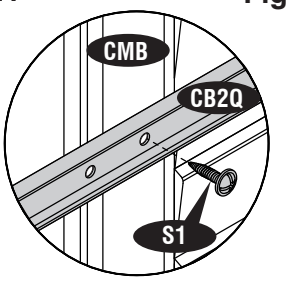

Fig.3

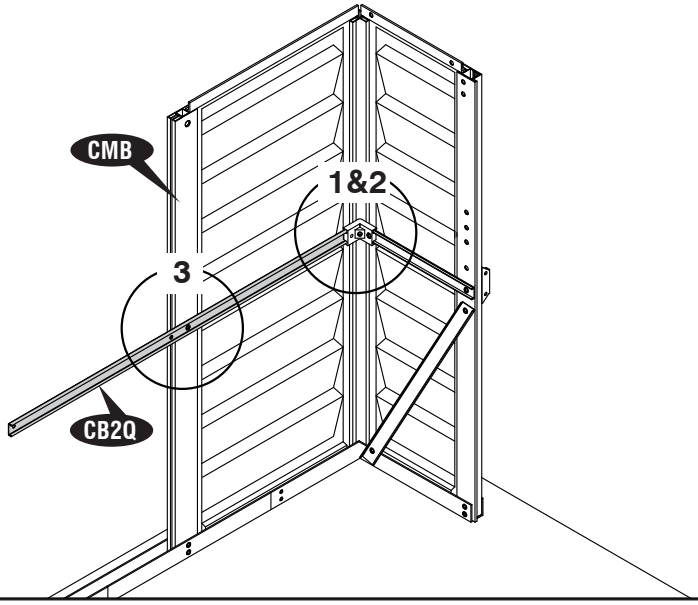

9

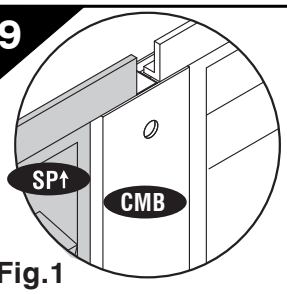

Fig.1

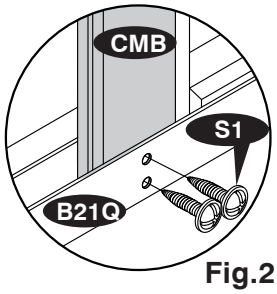

Fig.2

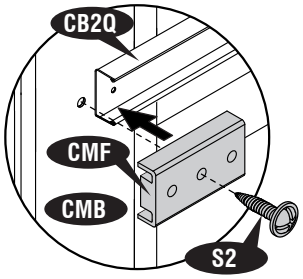

Fig.3

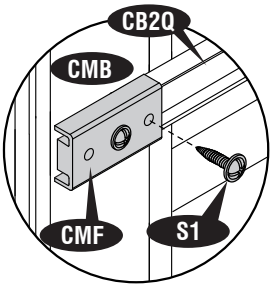

Fig.4

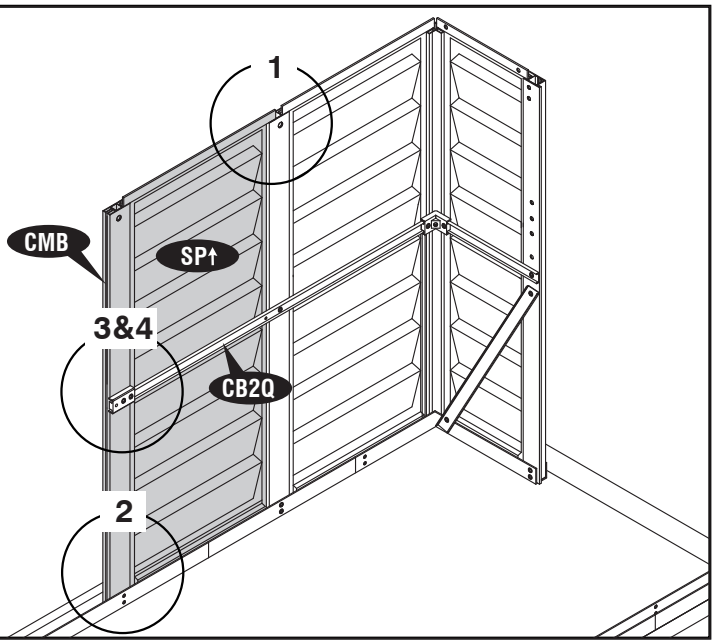

10

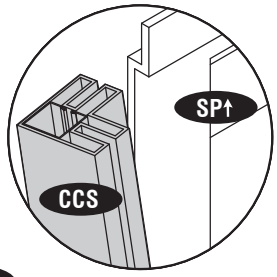

Fig.1

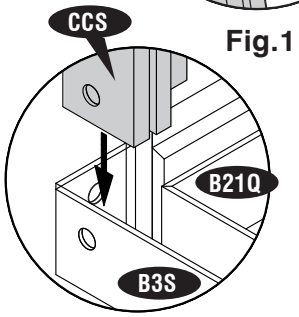

Fig.2

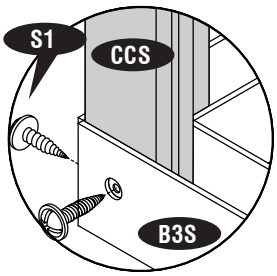

Fig.3

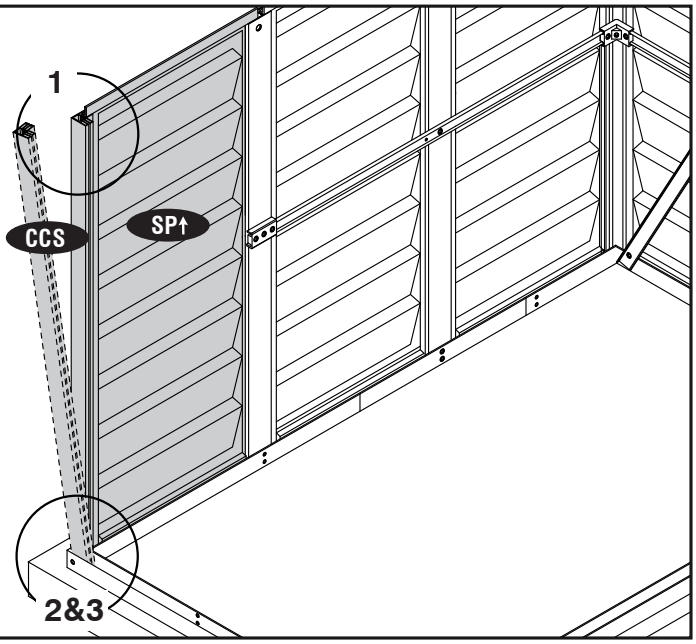

11

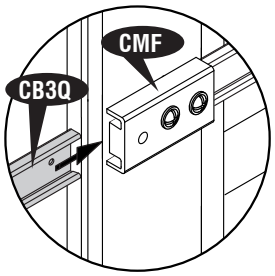

Fig.1

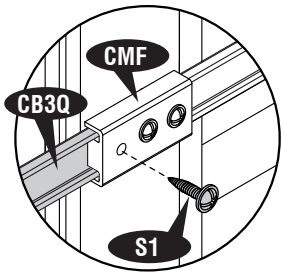

Fig.2

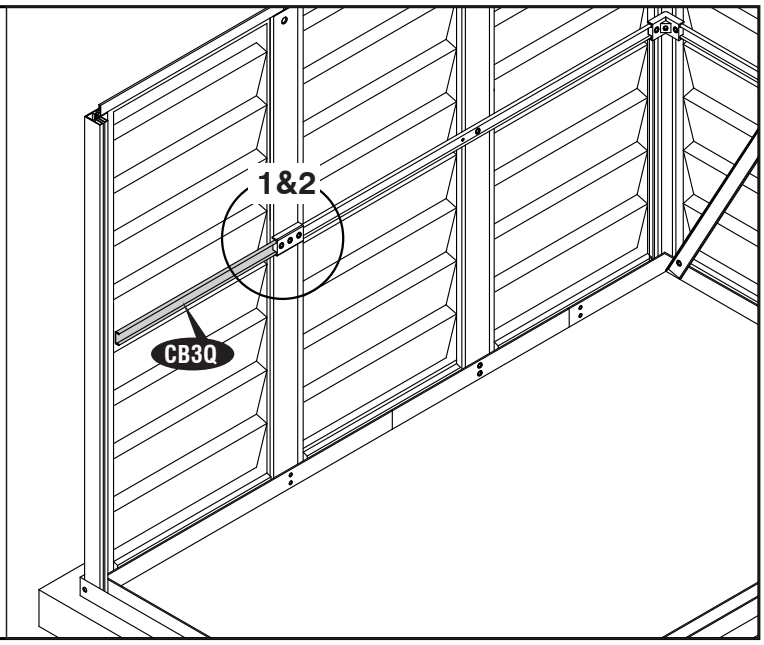

12

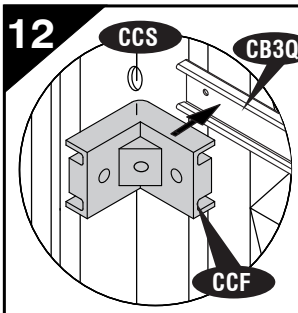

Fig.1

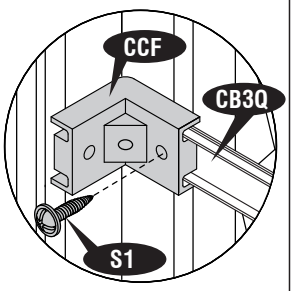

Fig.2

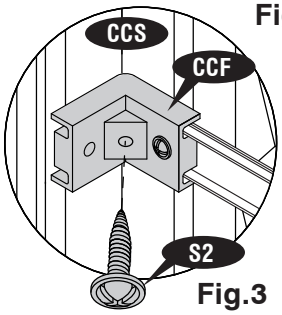

Fig.3

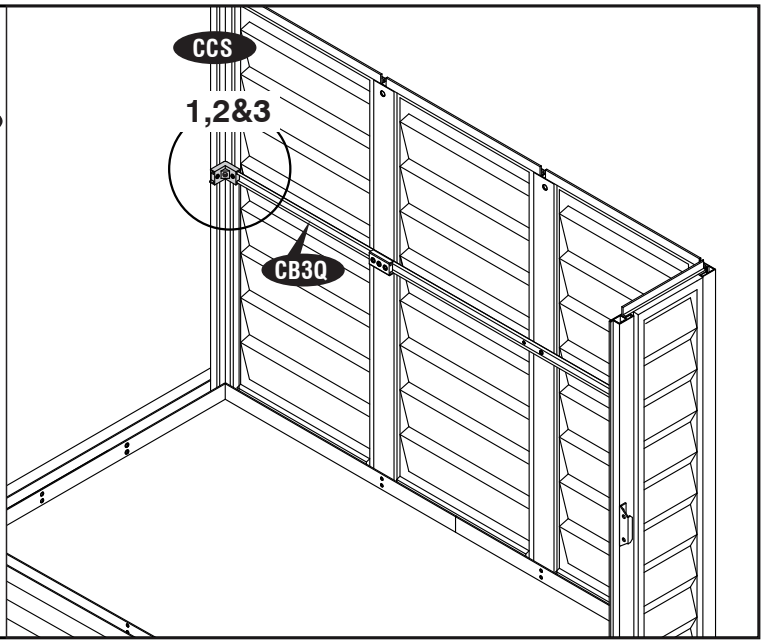

13

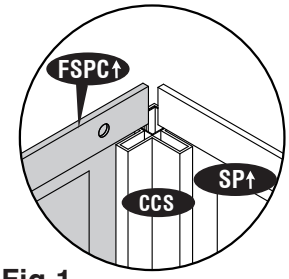

Fig.1

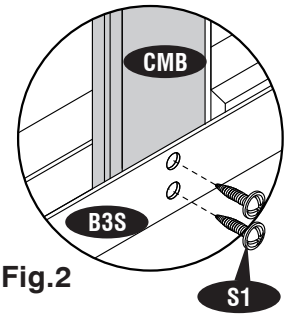

Fig.2

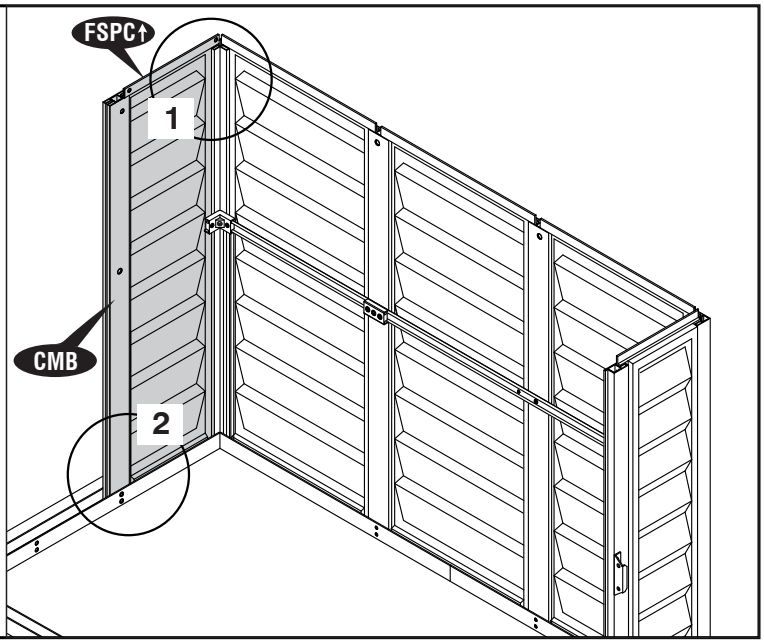

14

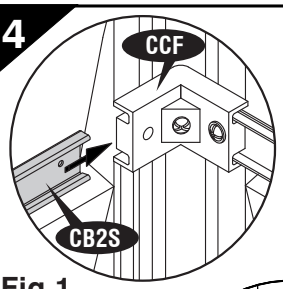

Fig.1

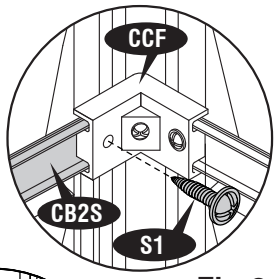

Fig.2

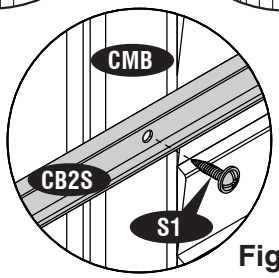

Fig.3

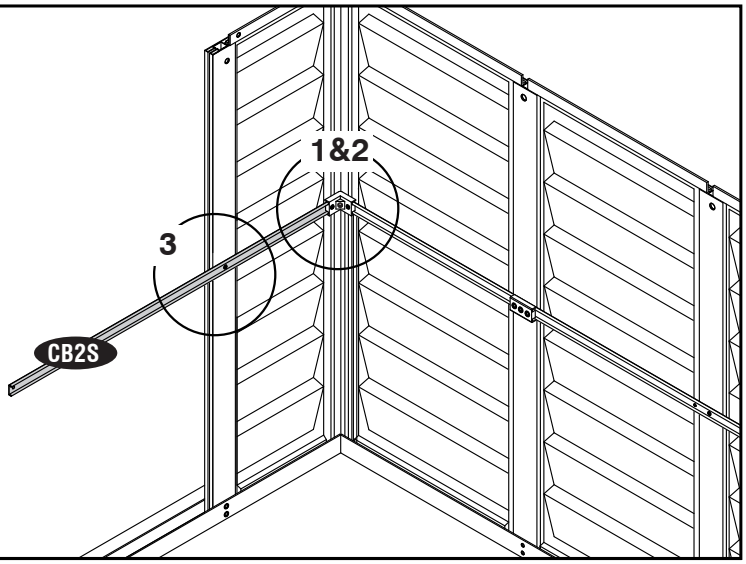

15

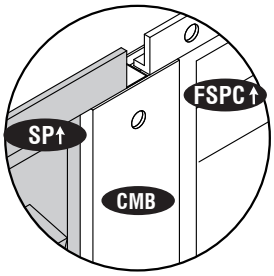

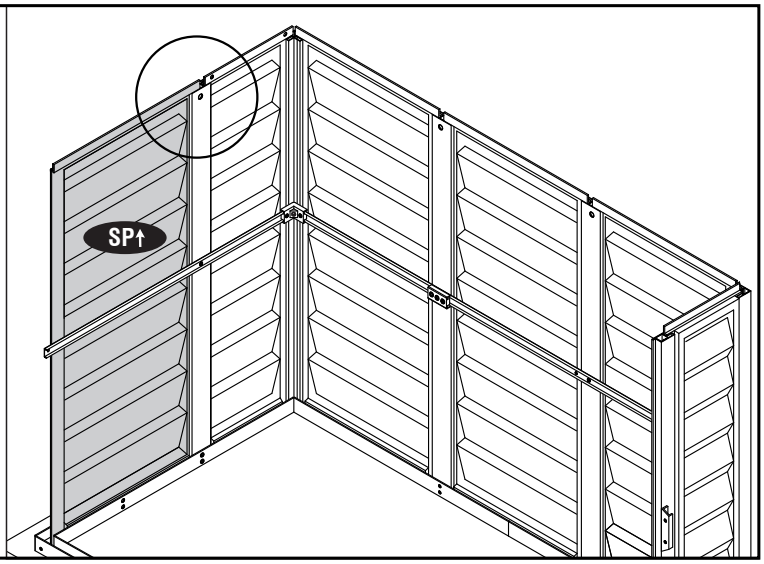

16

Note *Remove CCES from COAS.*

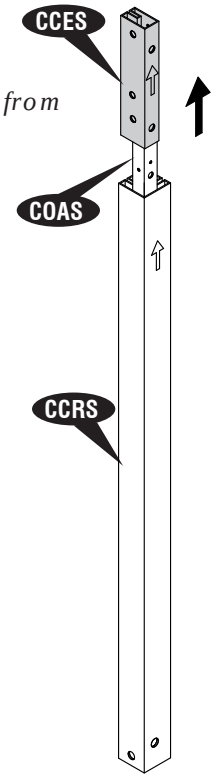

17

Note *Remove COAS from CCRS .*

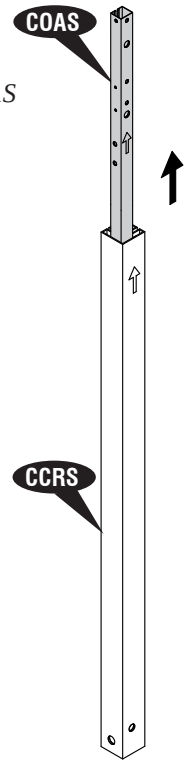

18

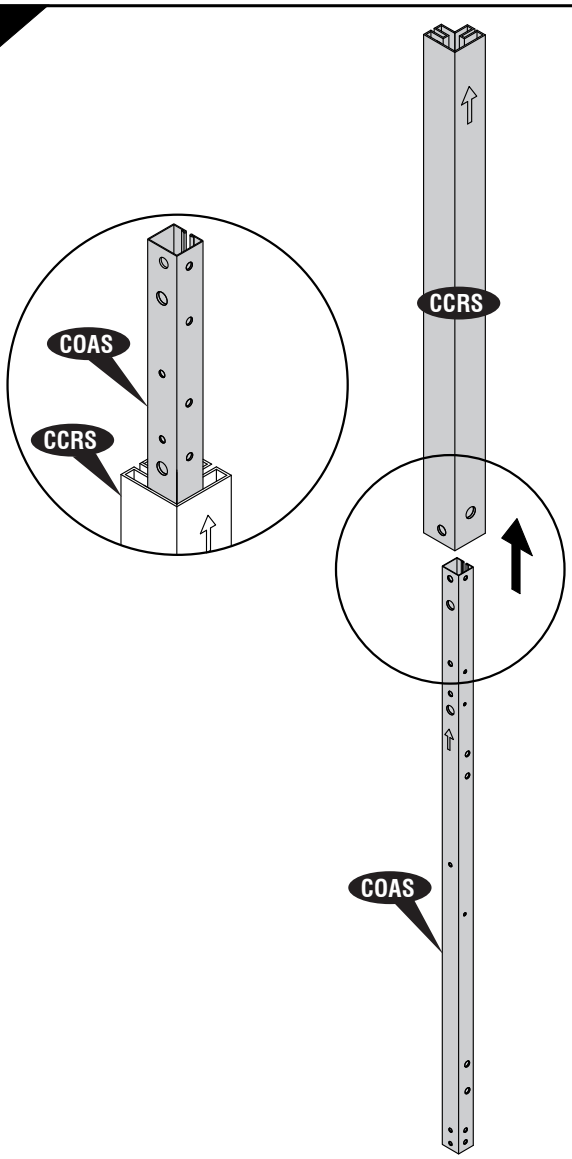

19

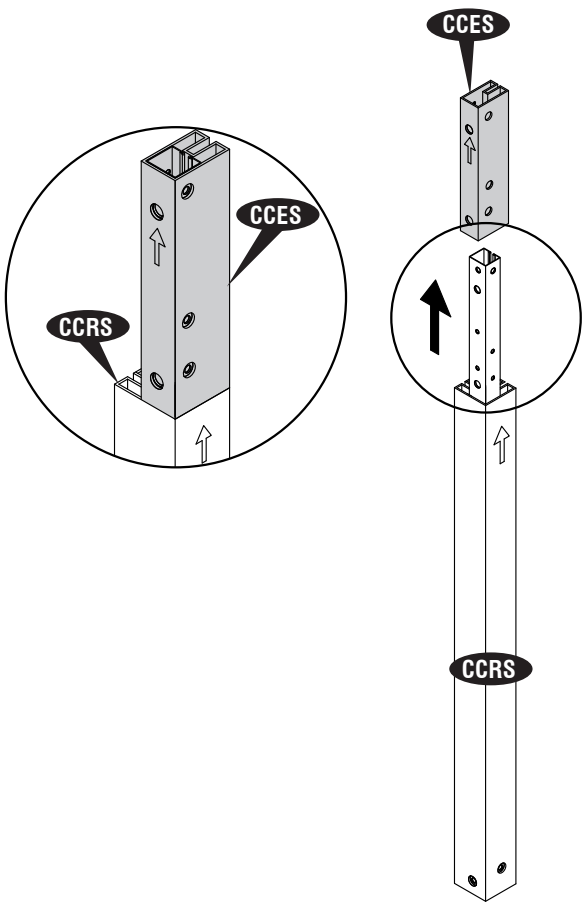

20

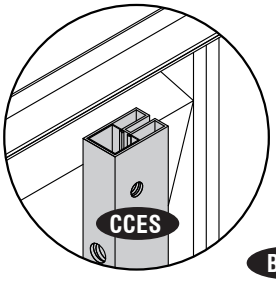

Fig.1

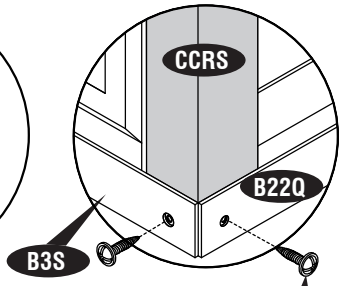

Fig.2

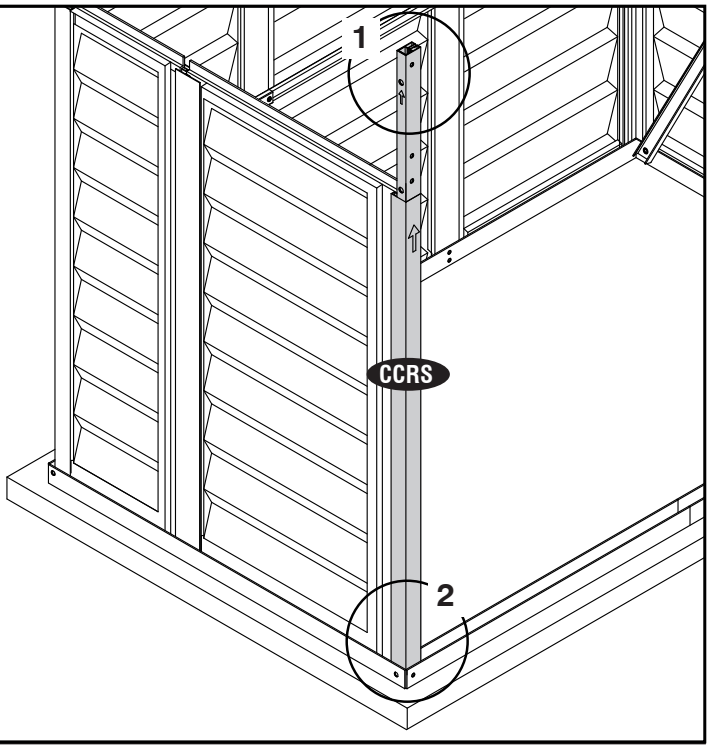

21

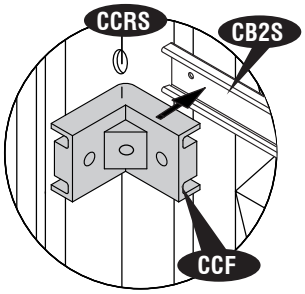

Fig.1

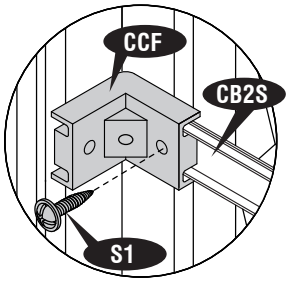

Fig.2

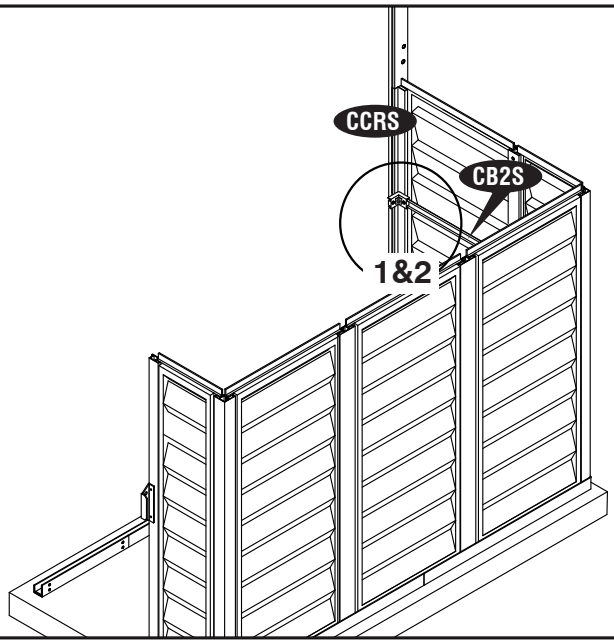

22

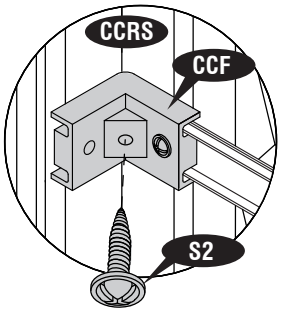

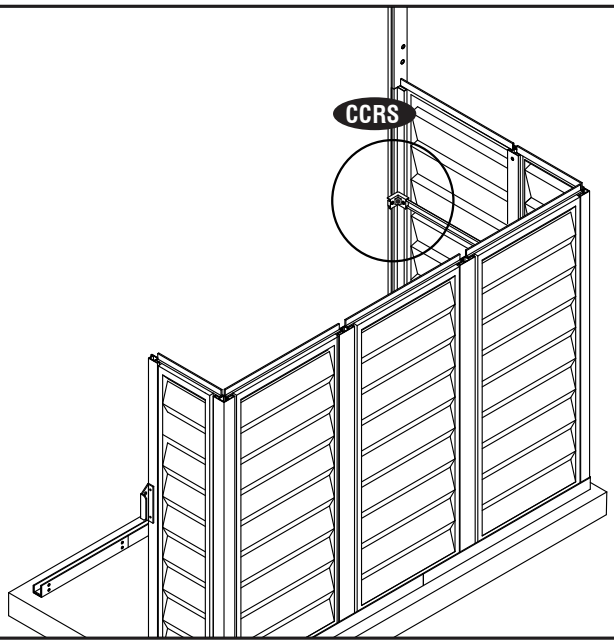

23

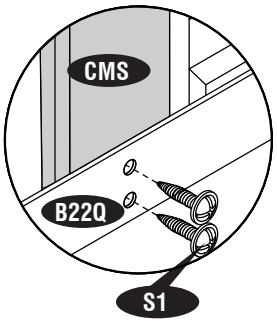

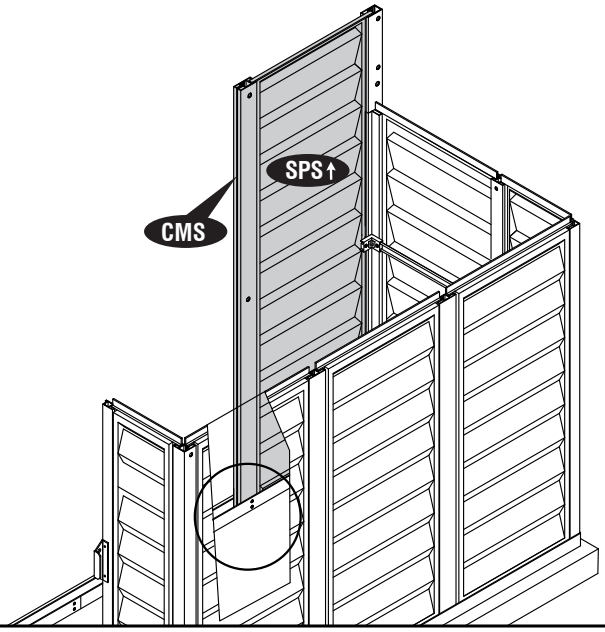

24

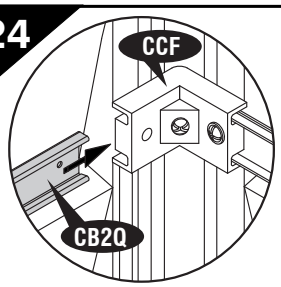

Fig.1

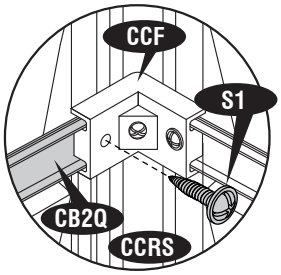

Fig.2

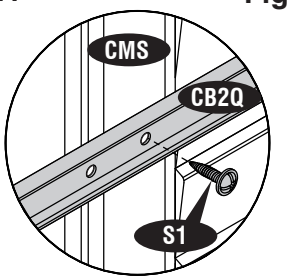

Fig.3

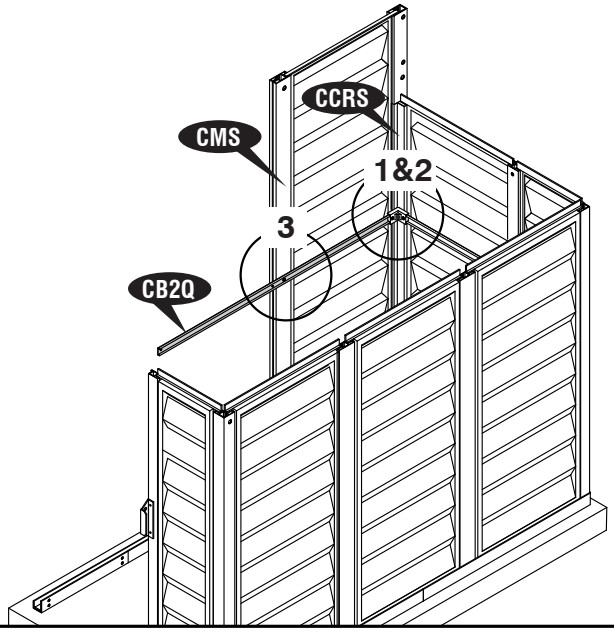

25

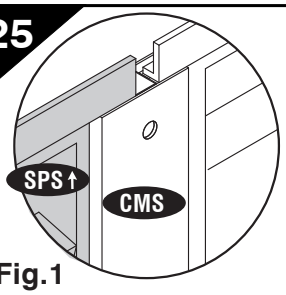

Fig.1

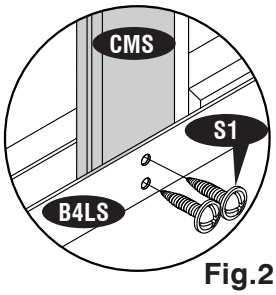

Fig.2

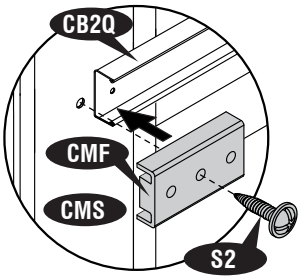

Fig.3

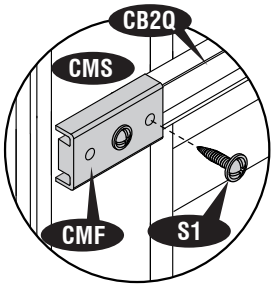

Fig.4

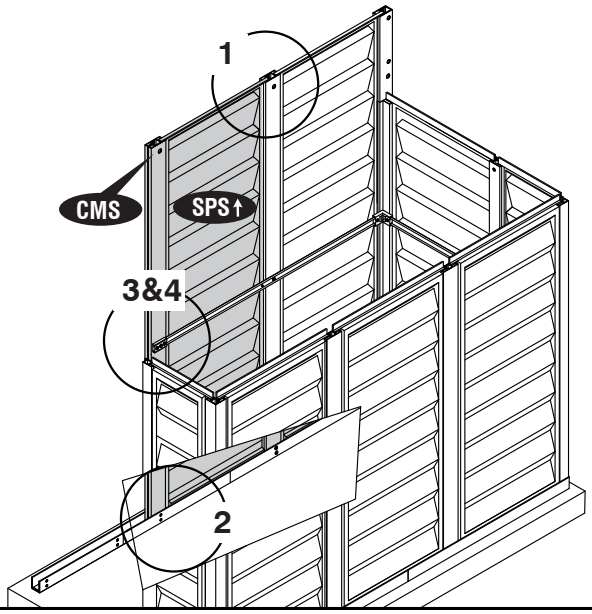

26

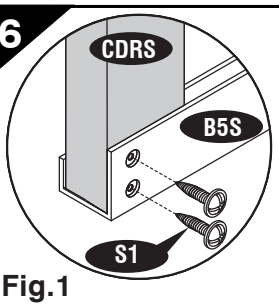

Fig.1

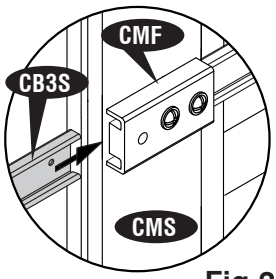

Fig.2

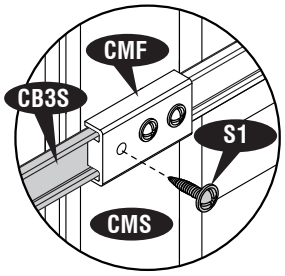

Fig.3

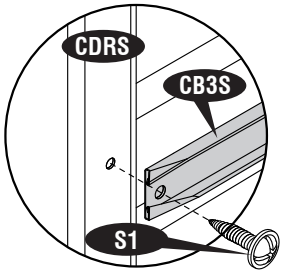

Fig.4

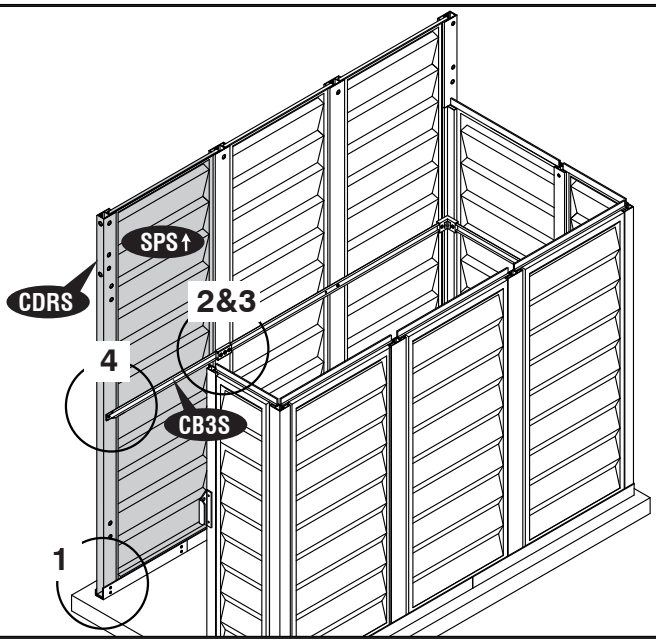

27

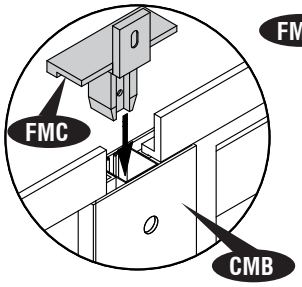

Fig.1

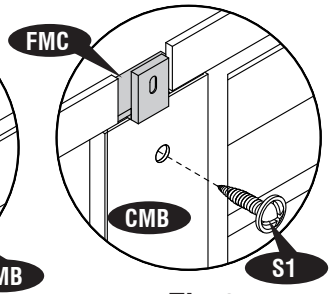

Fig.2

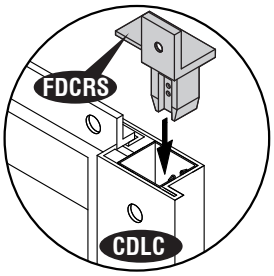

Fig.3

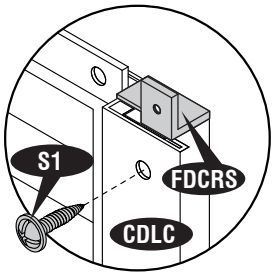

Fig.4

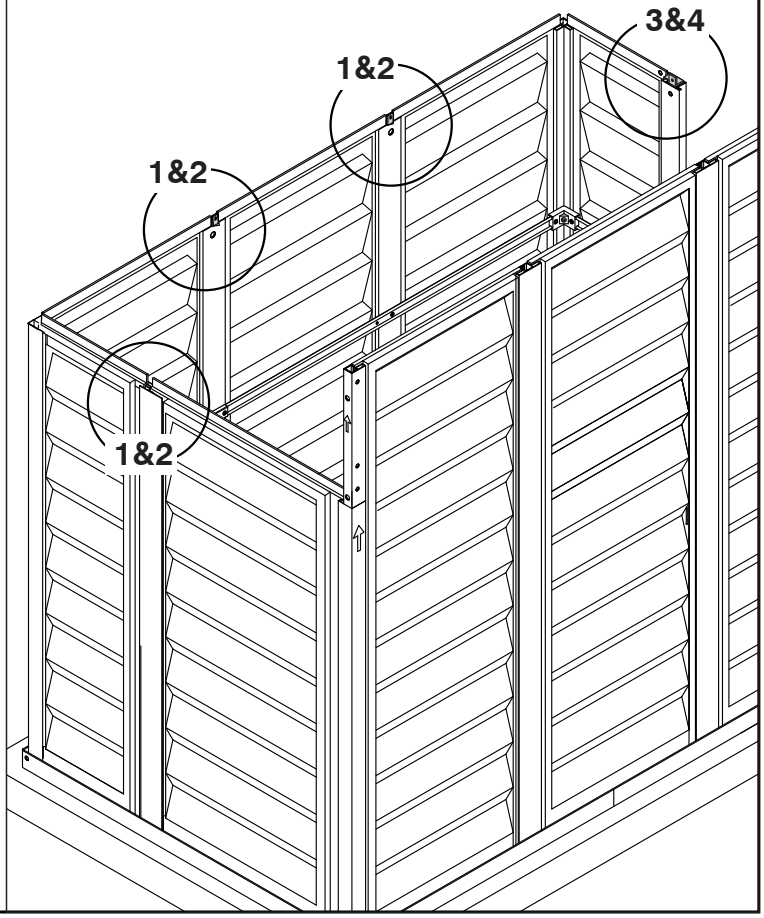

28

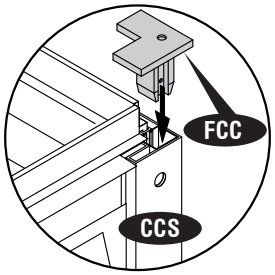

Fig.1

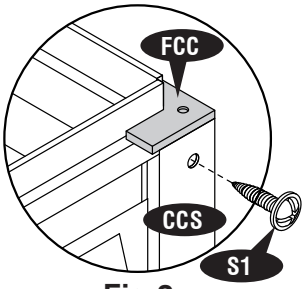

Fig.2

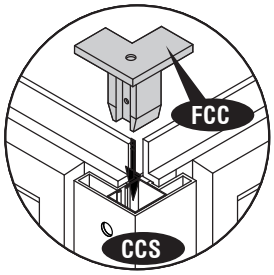

Fig.3

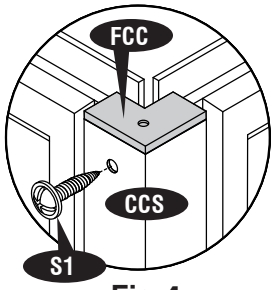

Fig.4

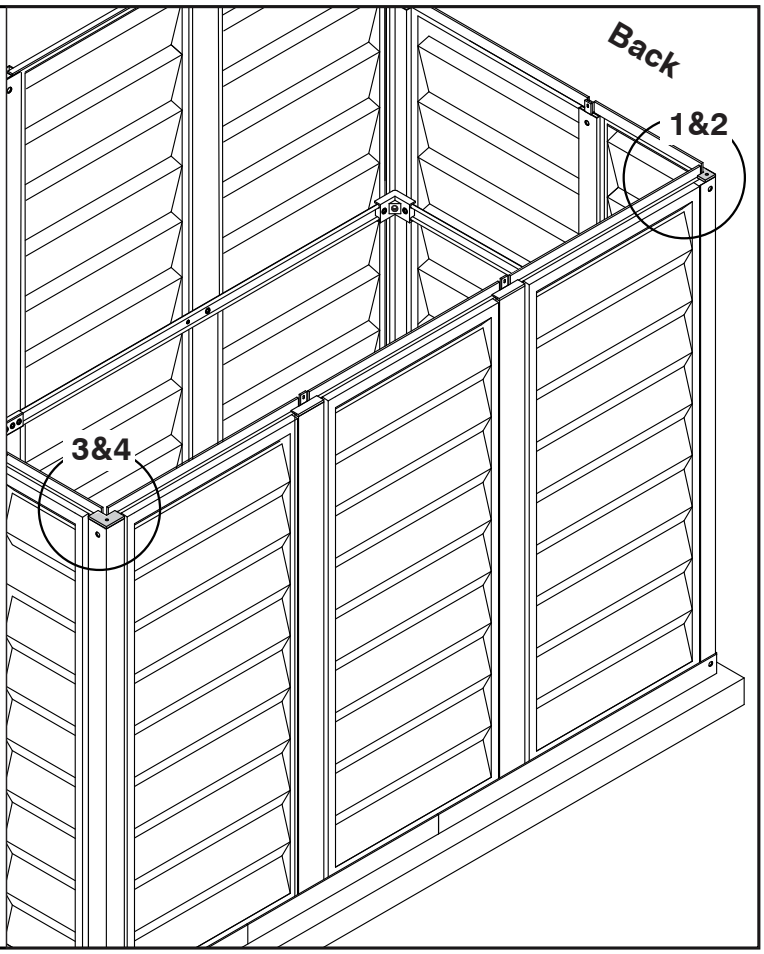

29

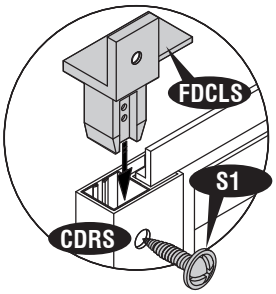

Fig.1

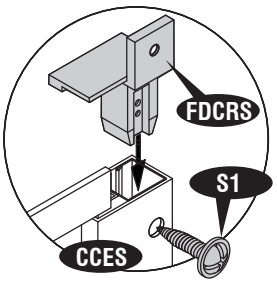

Fig.2

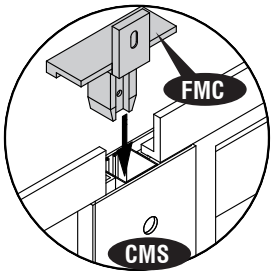

Fig.3

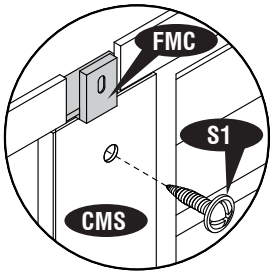

Fig.4

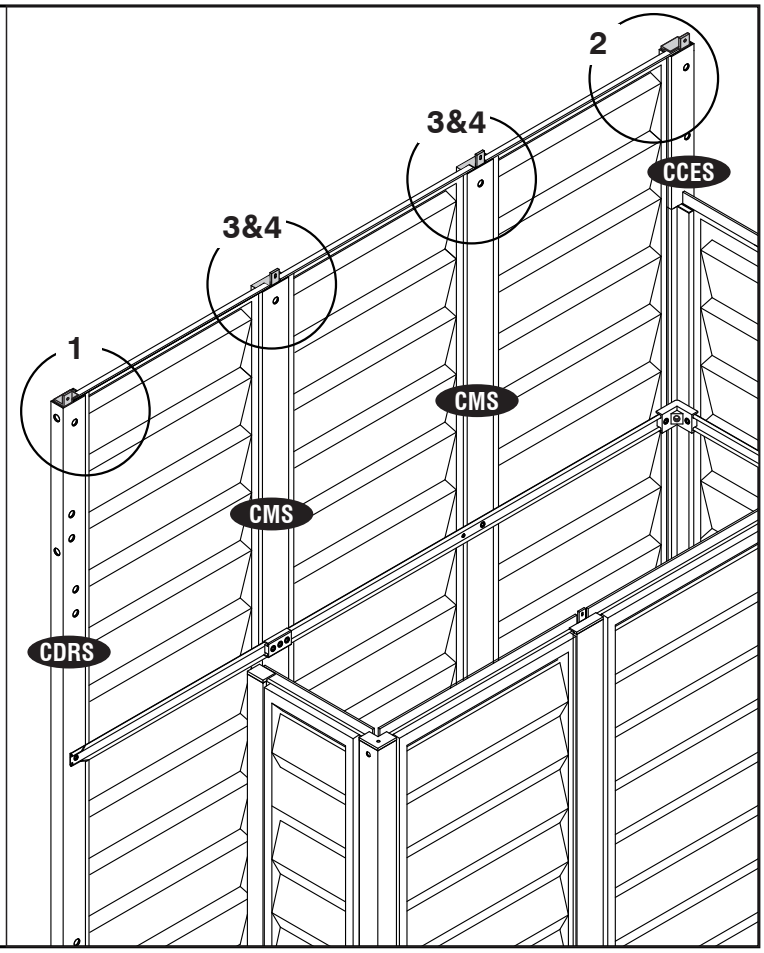

30

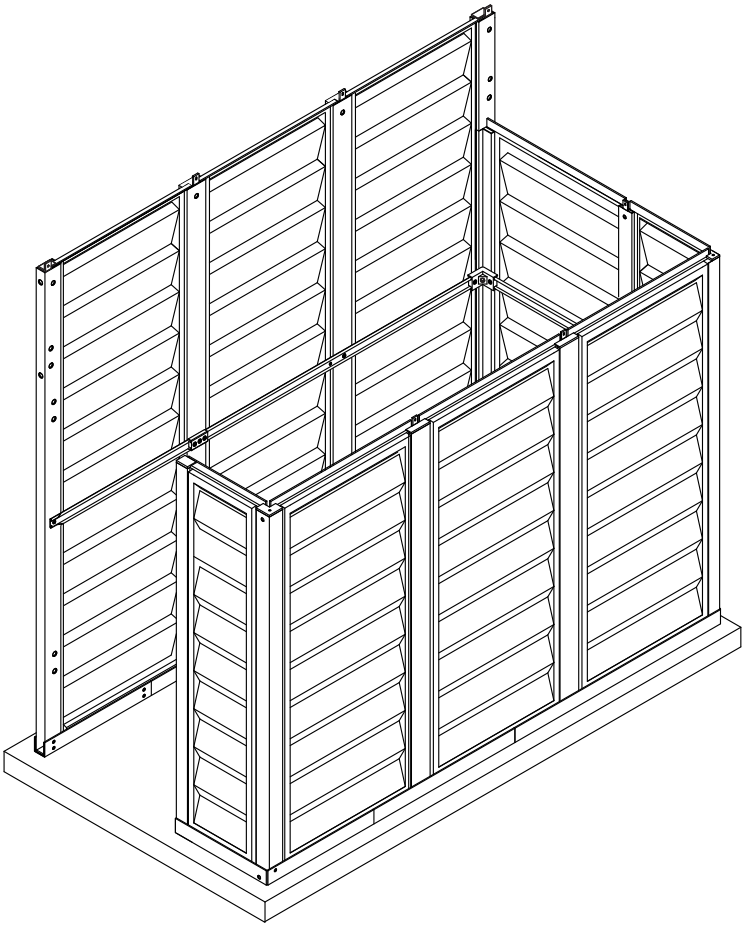

C. Roof Structure

Parts Needed:

CODE	QTY	CODE	QTY
RS1S	2	RS5S	1
RS2FS	1	RS6S	1
RS2BS	1	RS9B	2
RS4S	2	DSHC	1
RS3LQ	1	FRLC	2
RS3SQ	1	MJ	2
RS3LS	1	RJ	2
RS3SS	1	S1	54
RS14S	3	S7	11
		S2	2

Exploded View

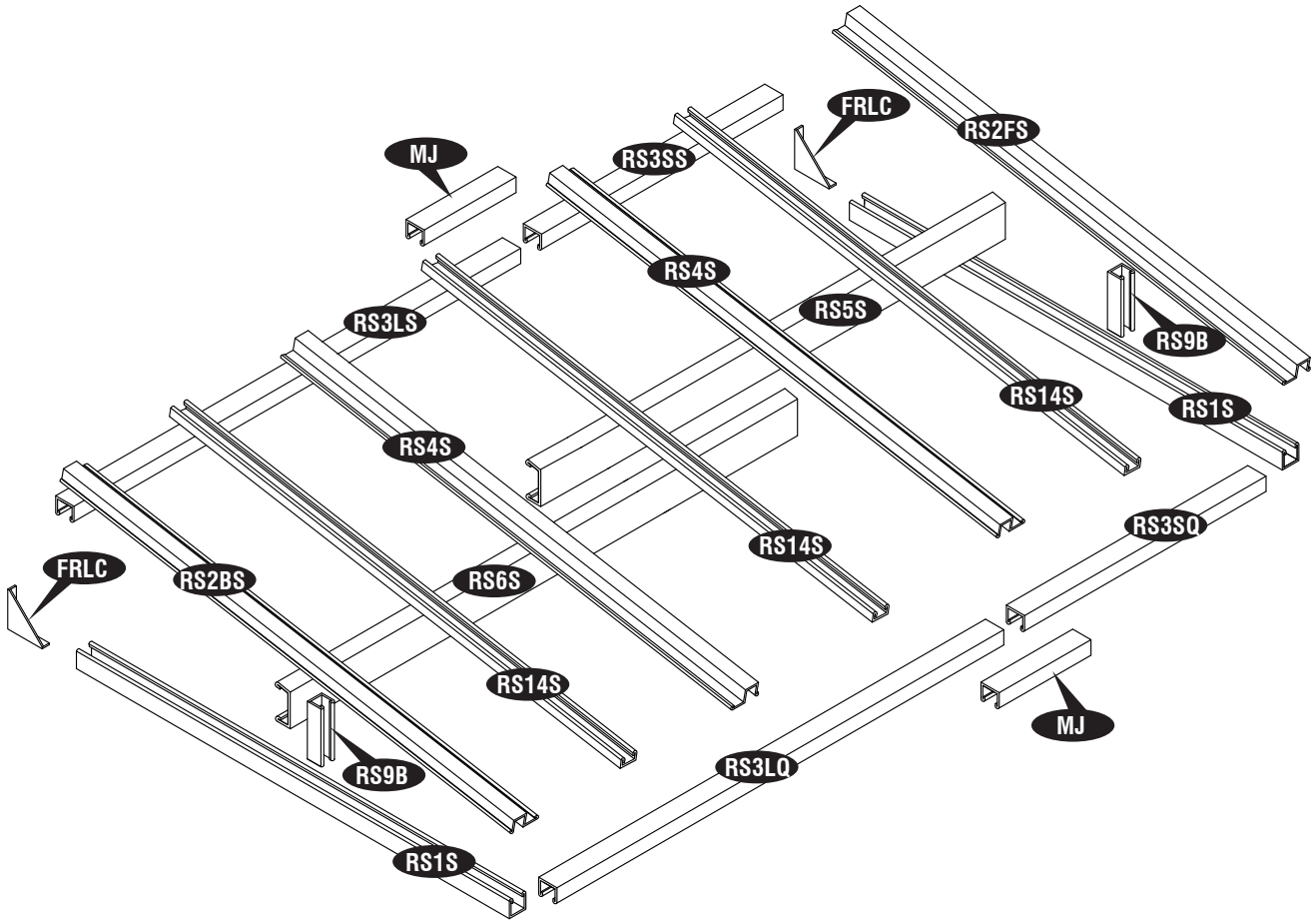

Front roof structure assembly

1

2

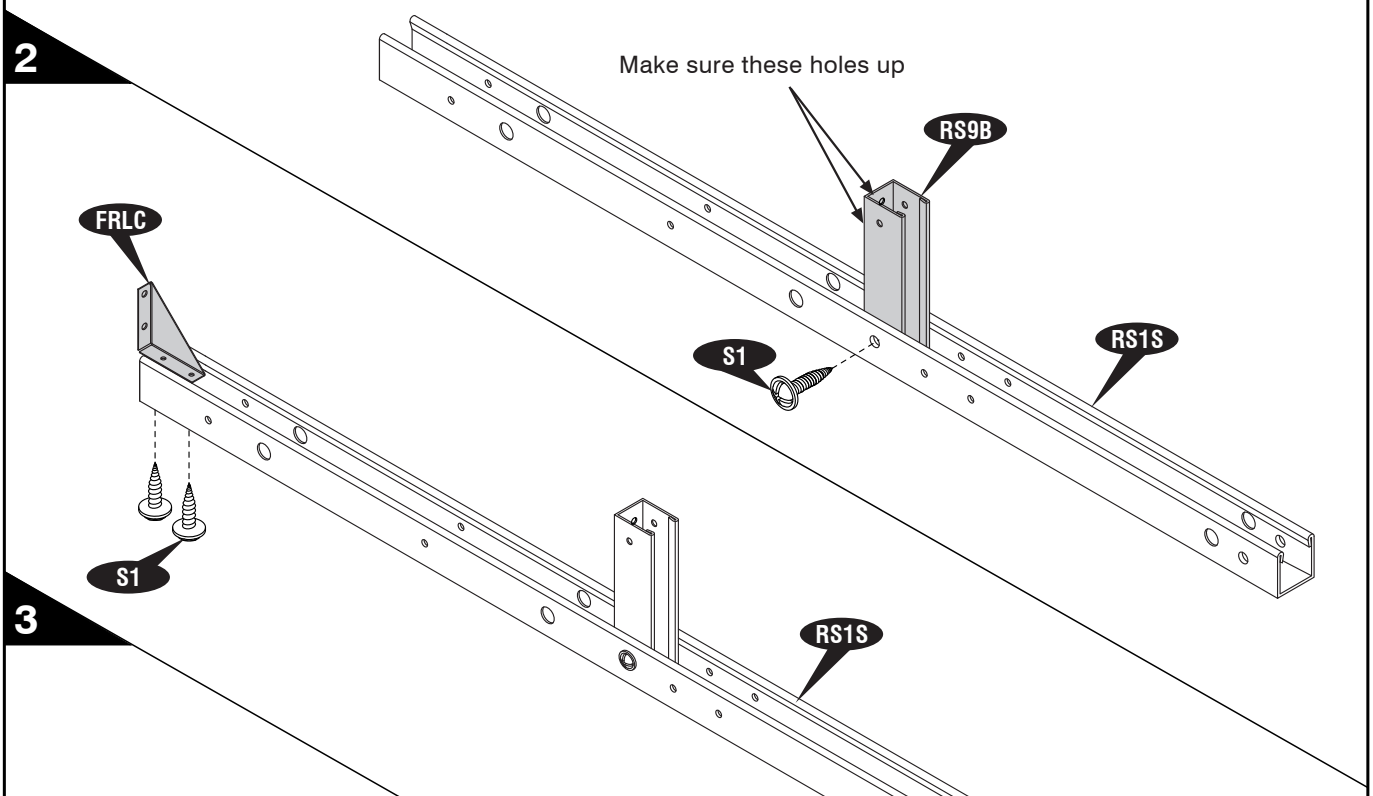

3

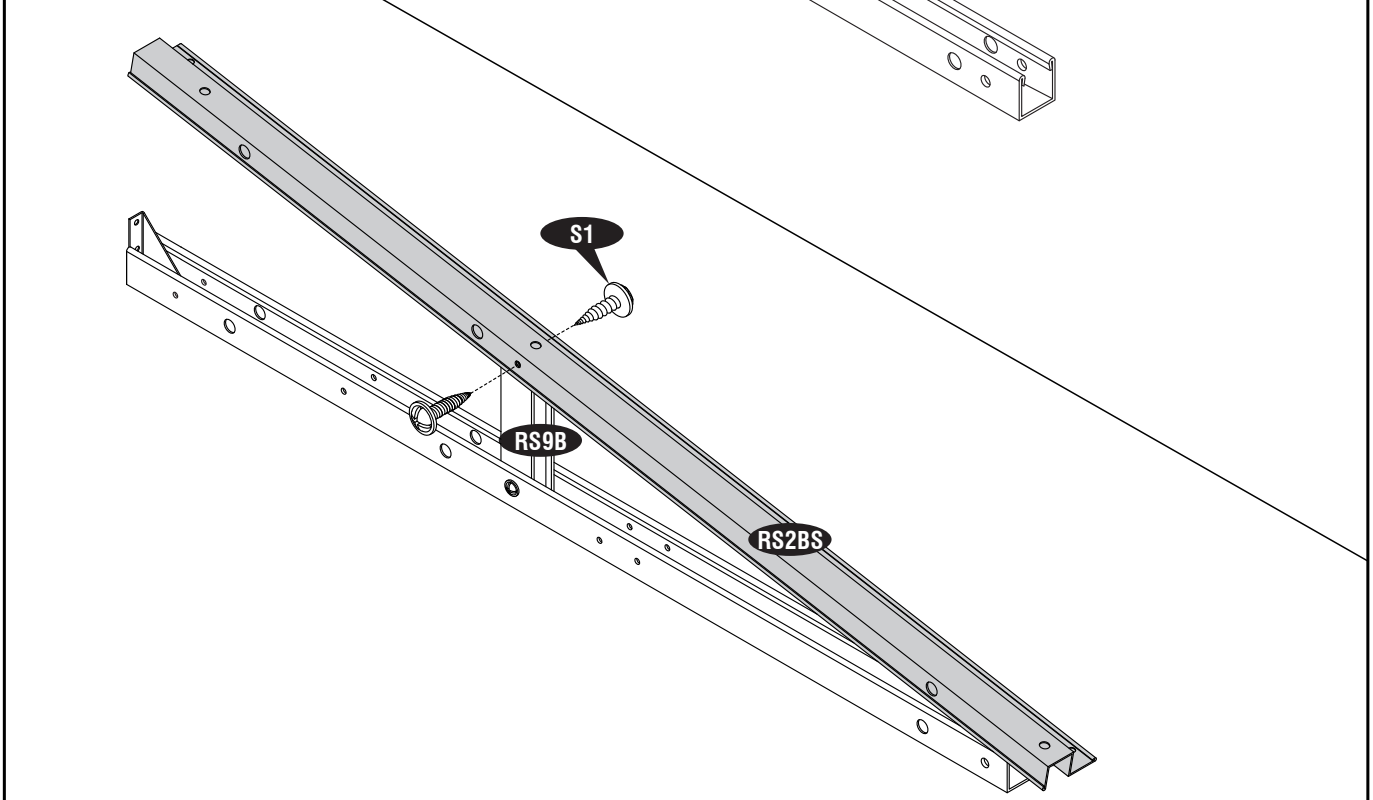

4 Back roof structure assembly

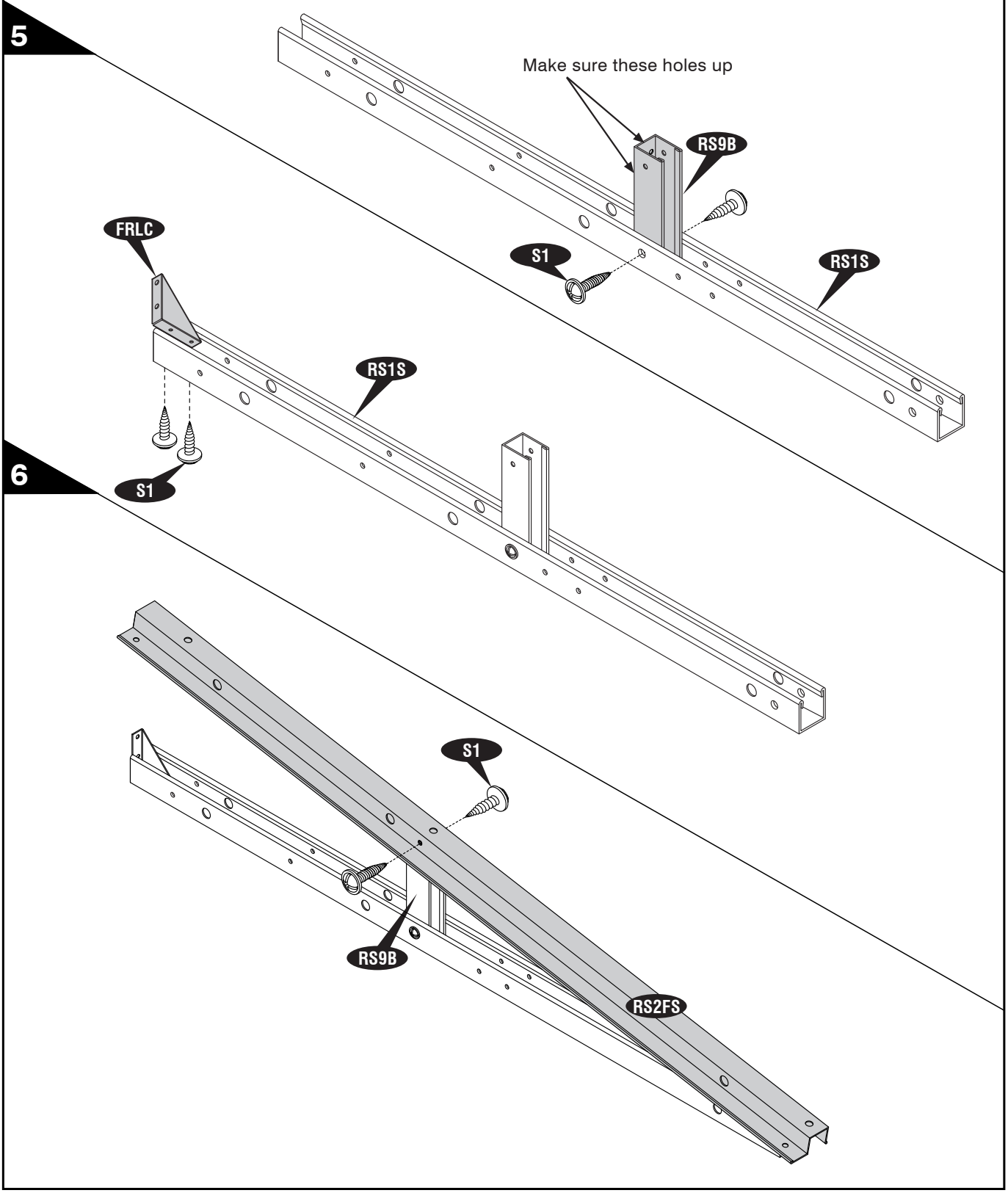

7

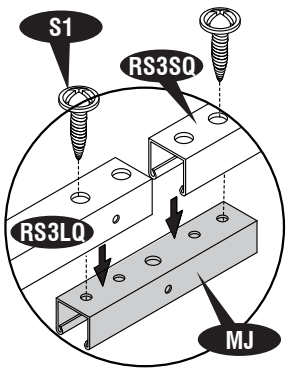

Fig.1

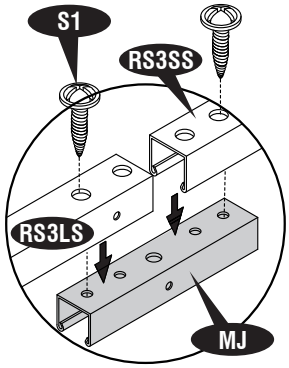

Fig.2

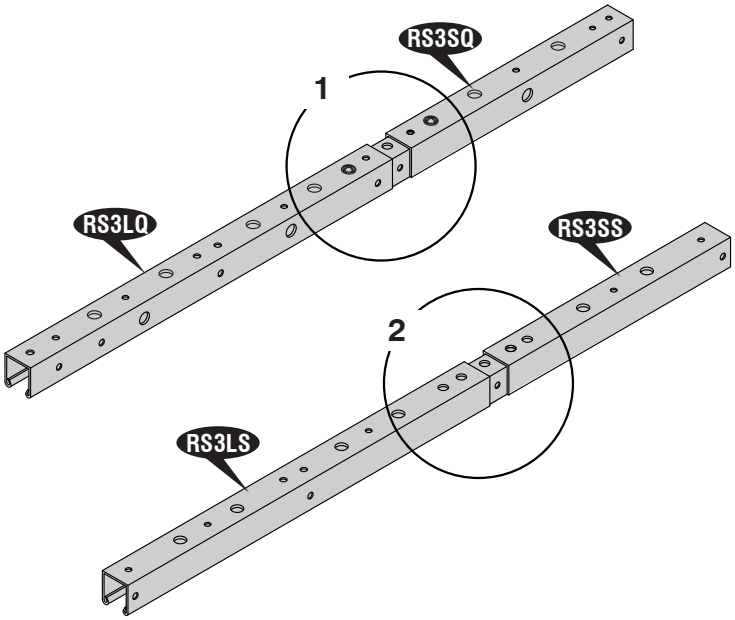

8

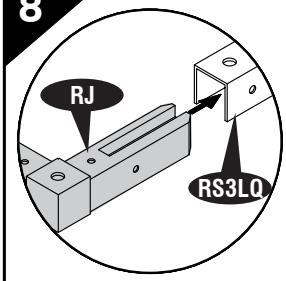

Fig.1

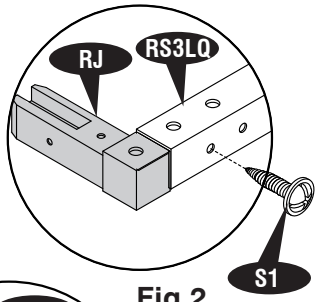

Fig.2

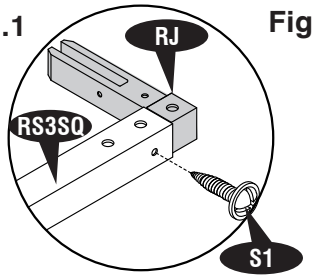

Fig.3

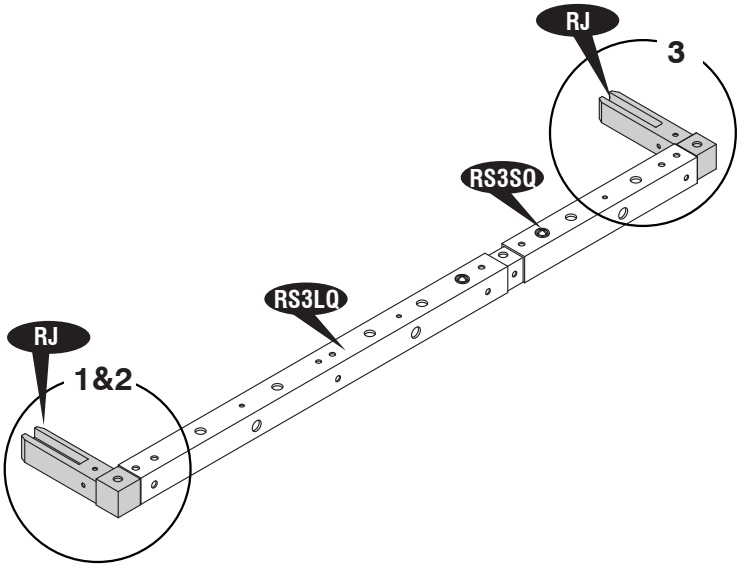

9

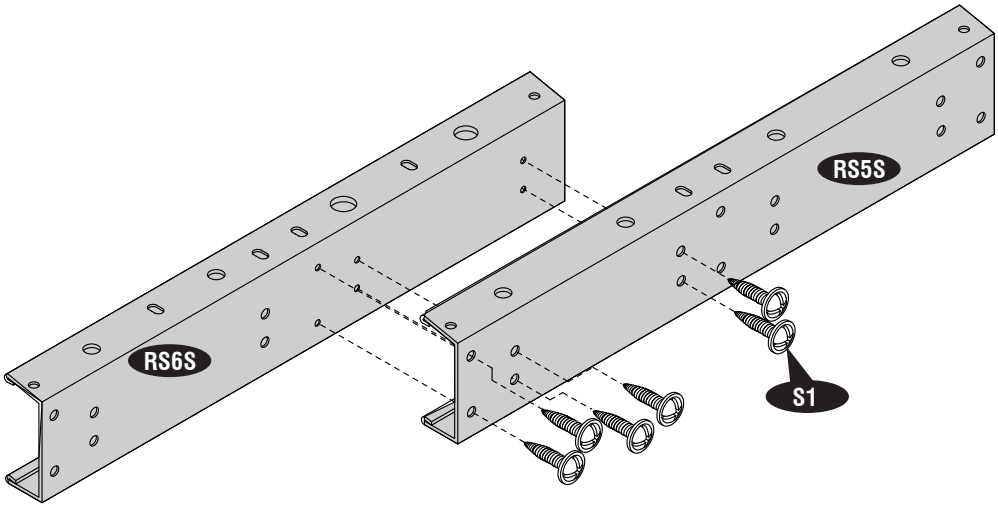

10

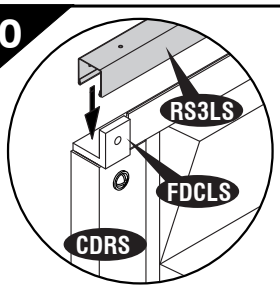

Fig.1

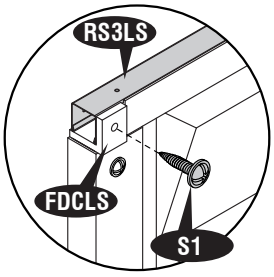

Fig.2

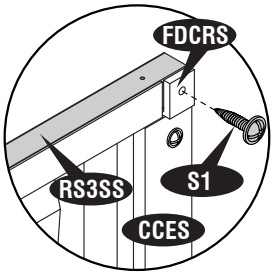

Fig.3

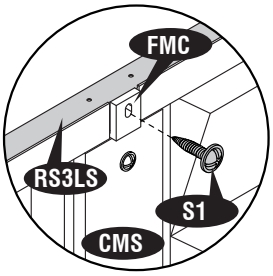

Fig.4

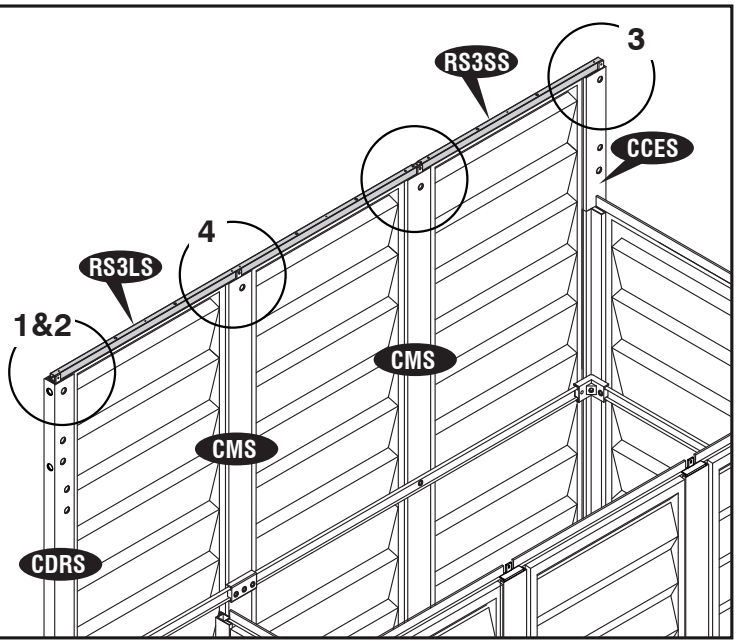

11

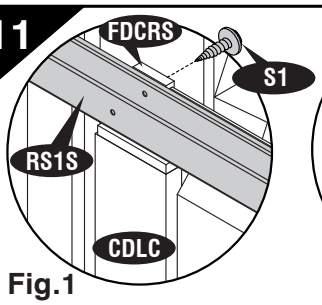

Fig.1

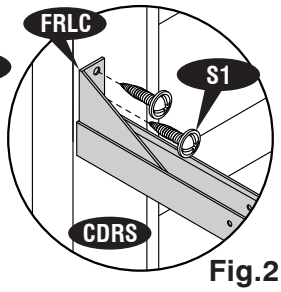

Fig.2

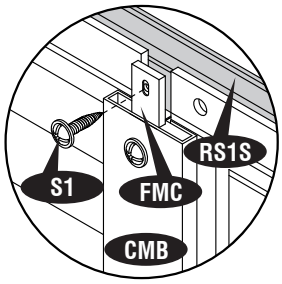

Fig.3

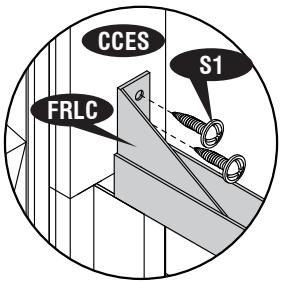

Fig.4

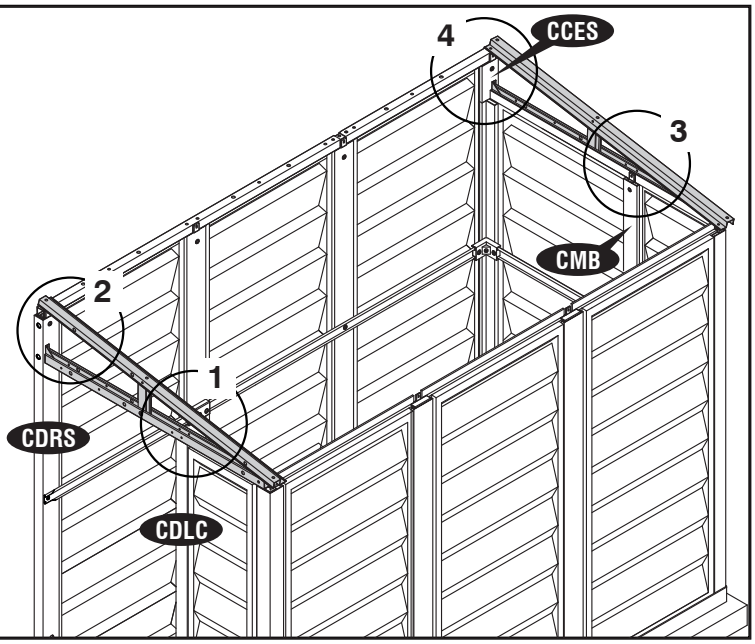

12

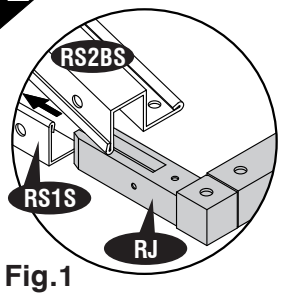

Fig.1

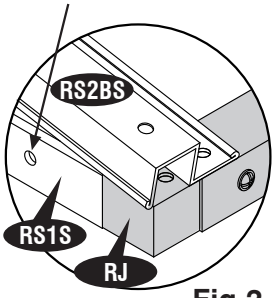

Fig.2

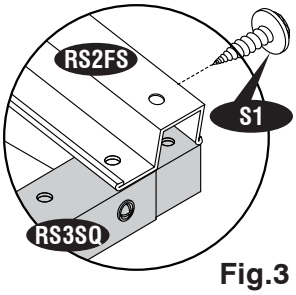

Fig.3

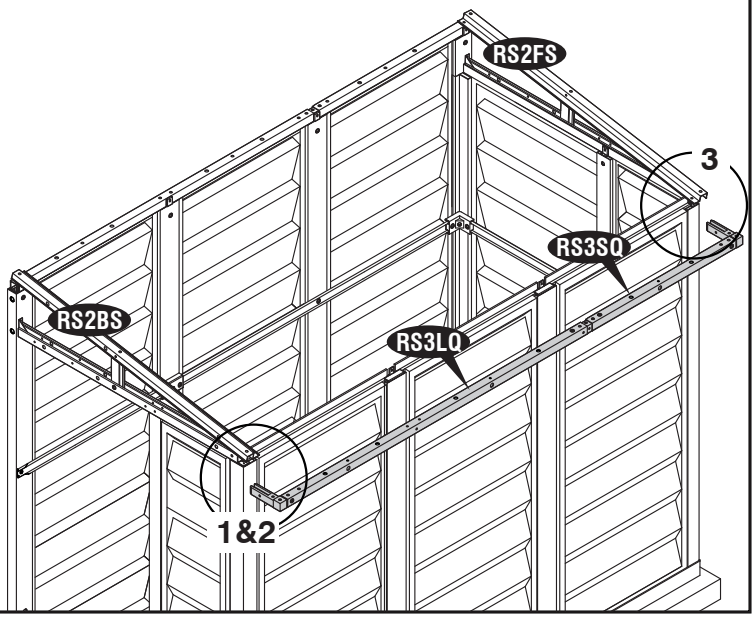

13

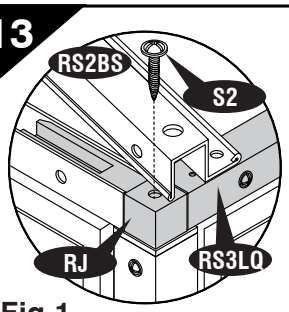

Fig.1

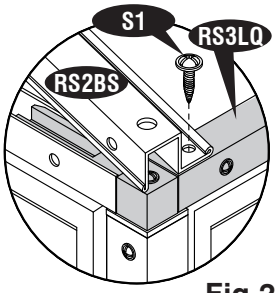

Fig.2

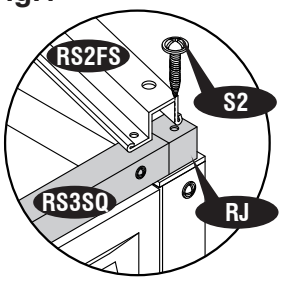

Fig.3

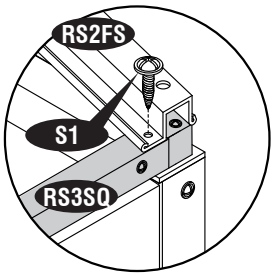

Fig.4

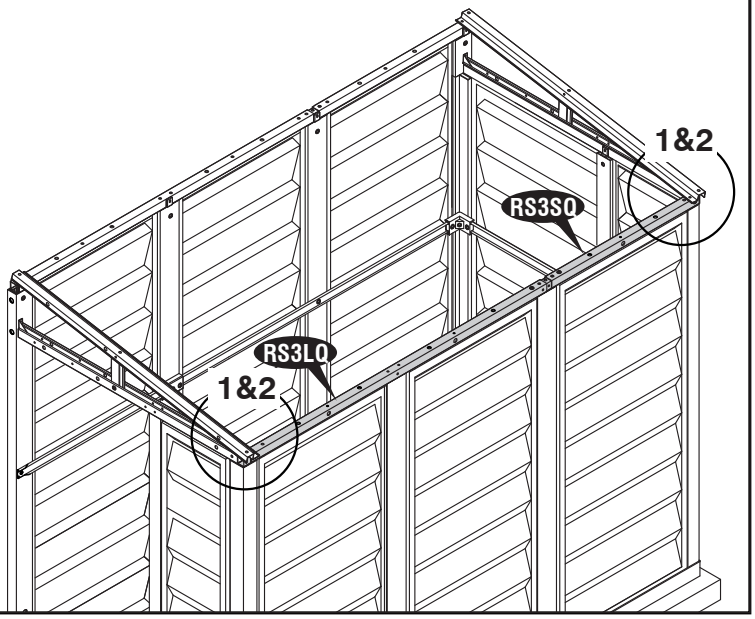

14

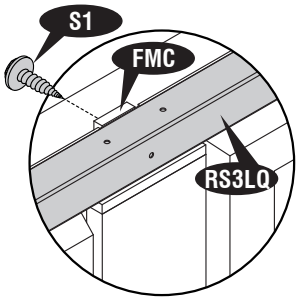

Fig.1

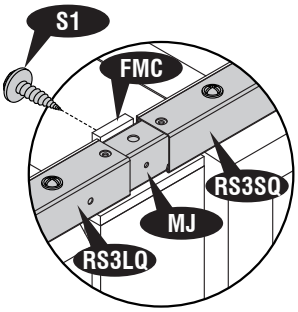

Fig.2

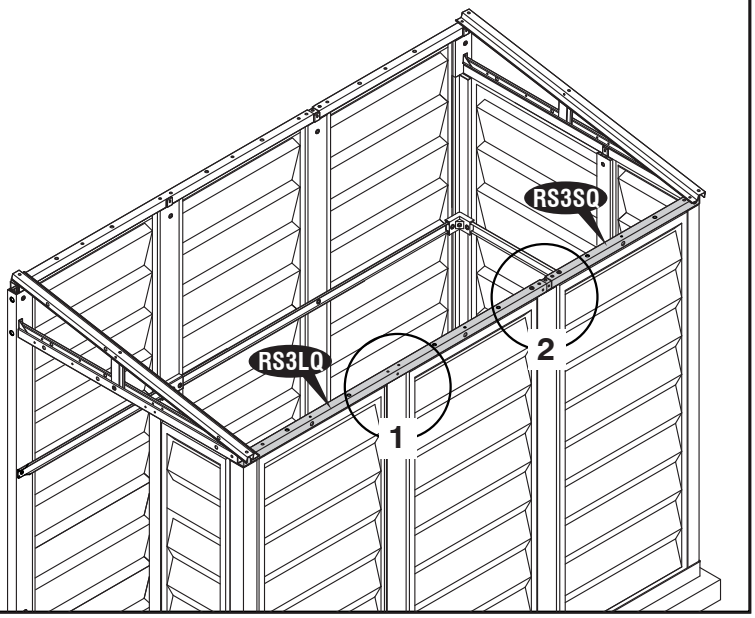

15

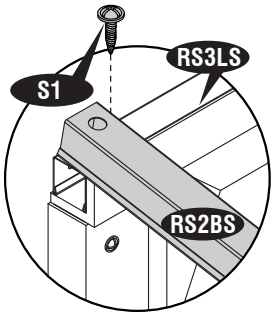

Fig.1

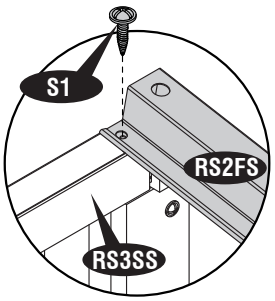

Fig.2

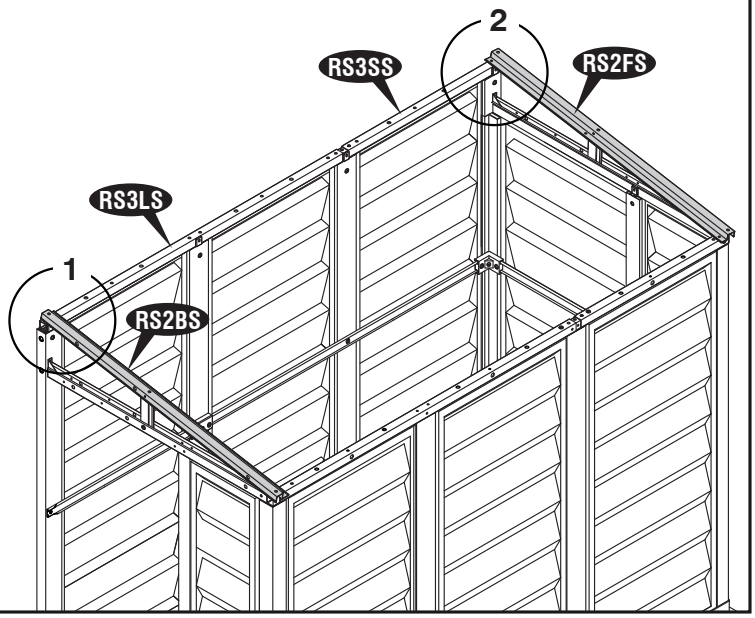

16

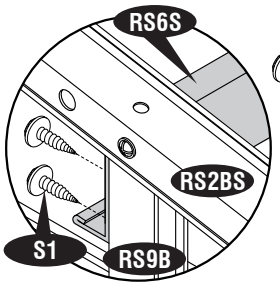

Fig.1

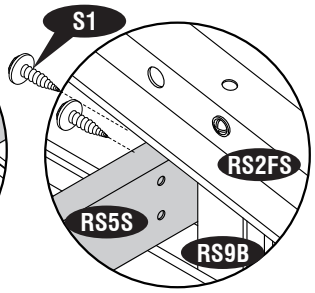

Fig.2

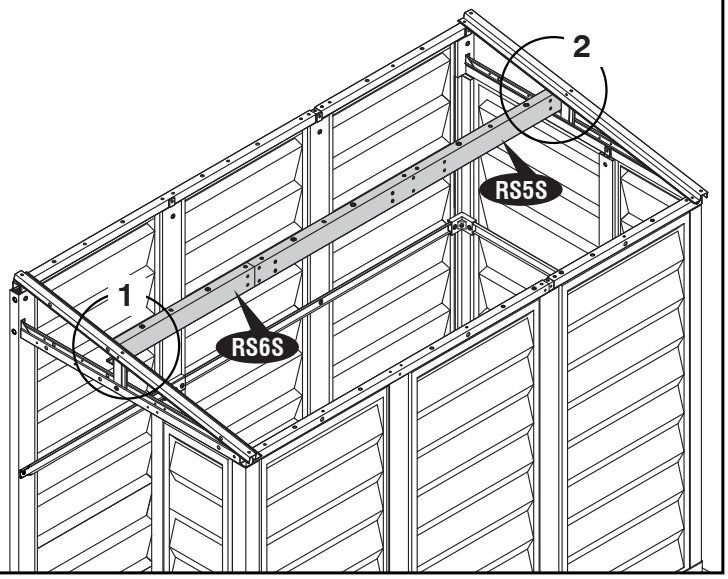

17

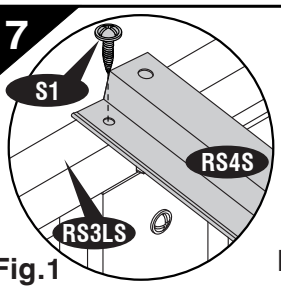

Fig.1

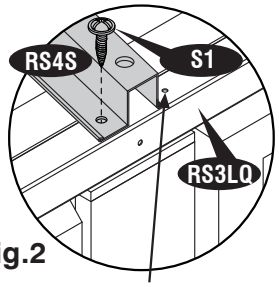

Fig.2

Do not fix this hole

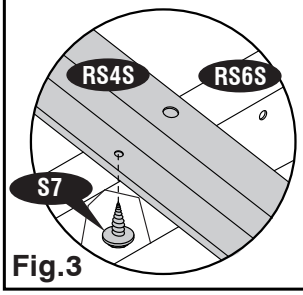

Fig.3

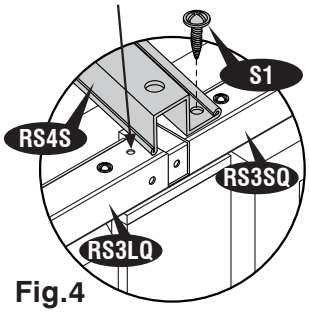

Fig.4

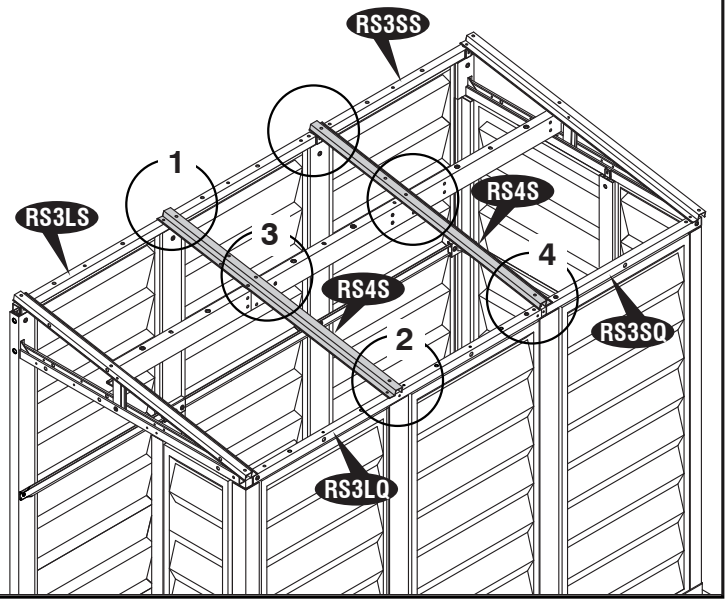

18

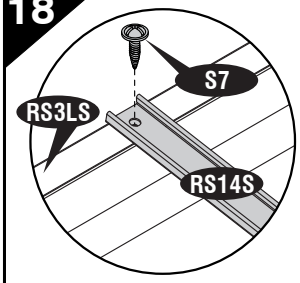

Fig.1

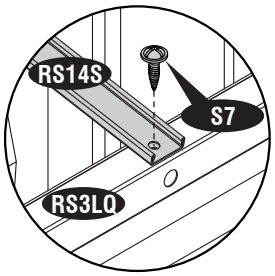

Fig.2

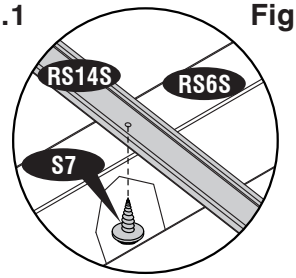

Fig.3

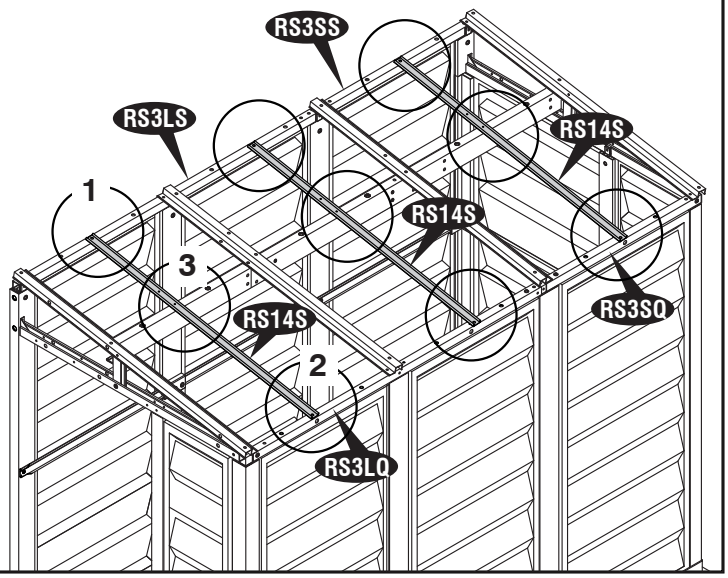

19

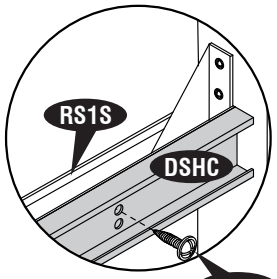

Fig.1

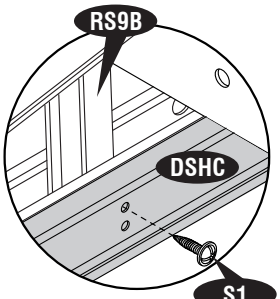

Fig.2

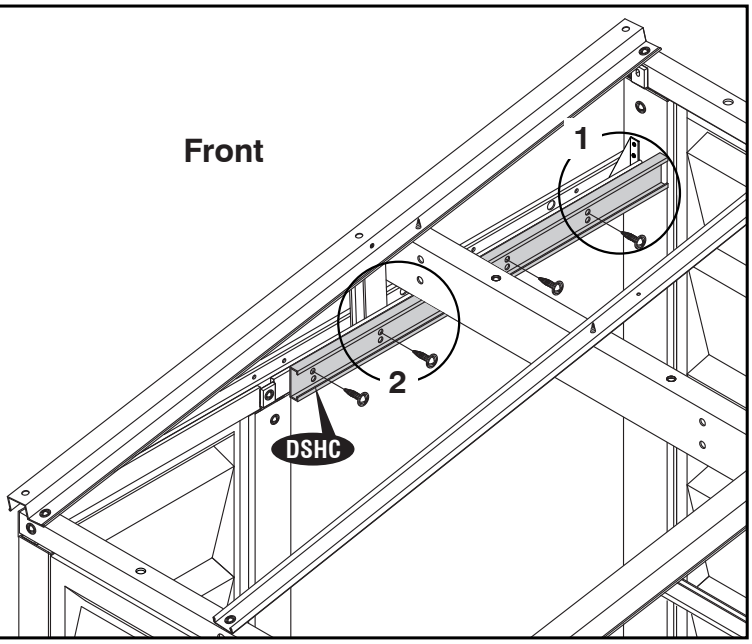

20

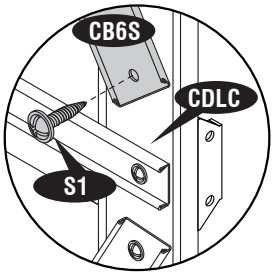

Fig.1

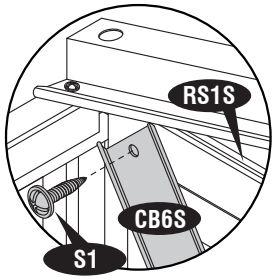

Fig.2

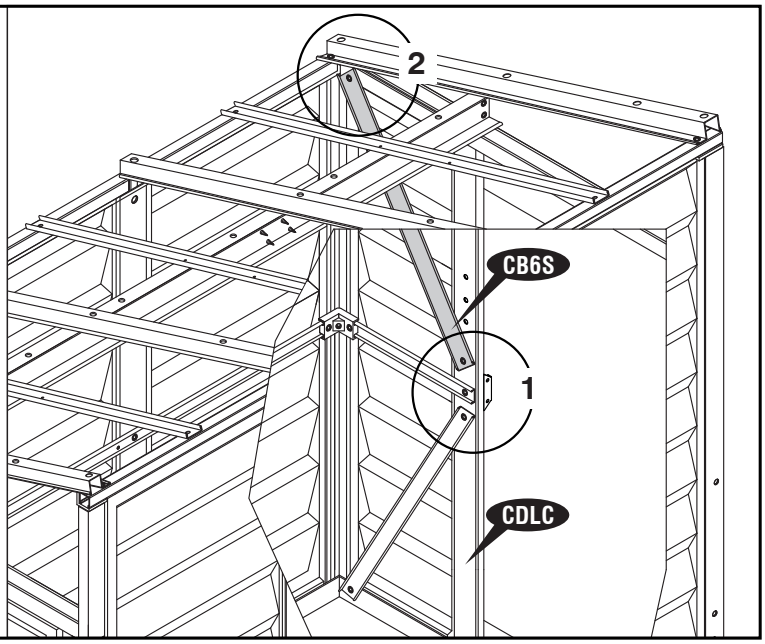

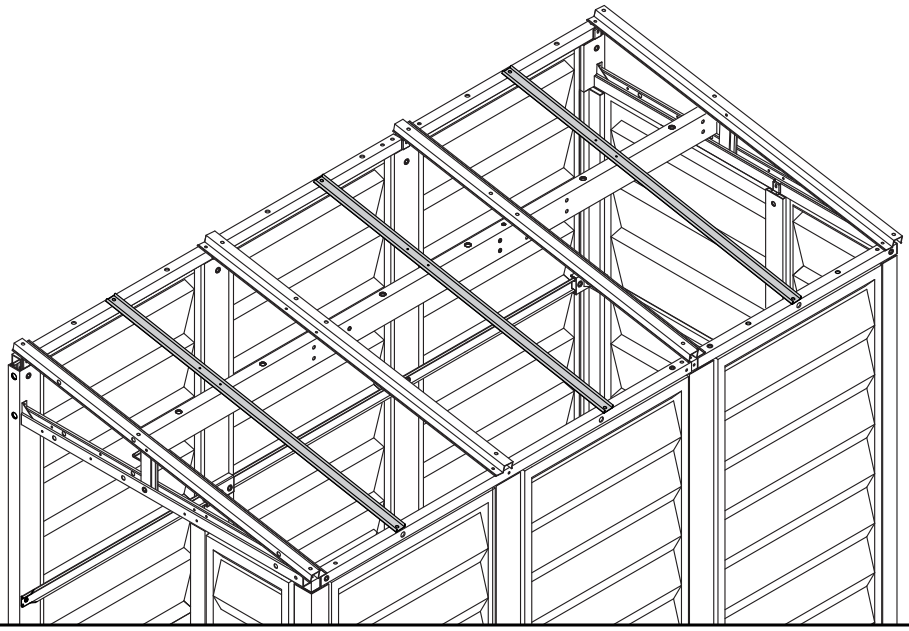

E. Roof panels

Parts Needed:

CODE	QTY	CODE	QTY
RPS↑	3	PPG	43
FPLC	1	PWS	43
FPRC	1	PIN	43
DS	1	S3	8
LSH	2	ST	1.57 meter

Note

Apply silicone into the holes before inserting the pins.

This is optional and should be done for heavy rain areas if needed.

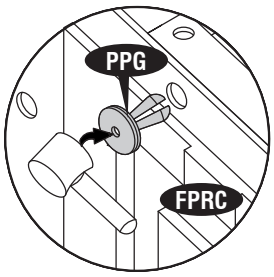

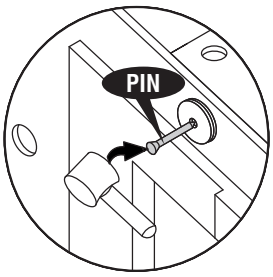

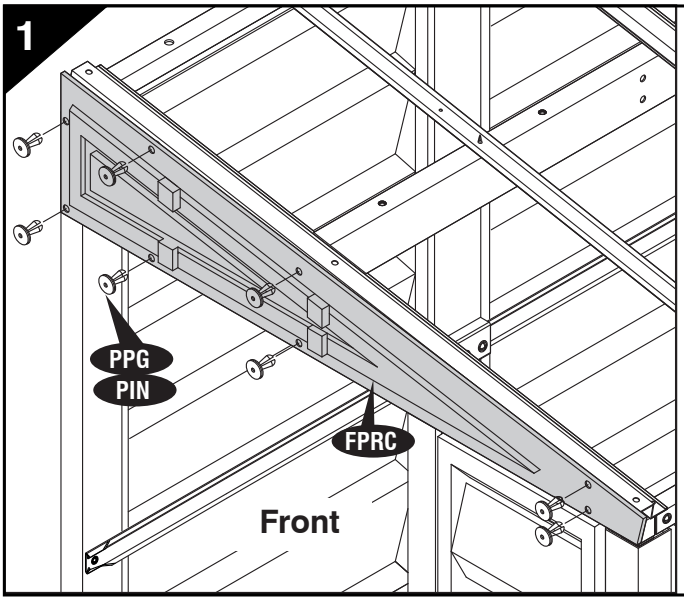

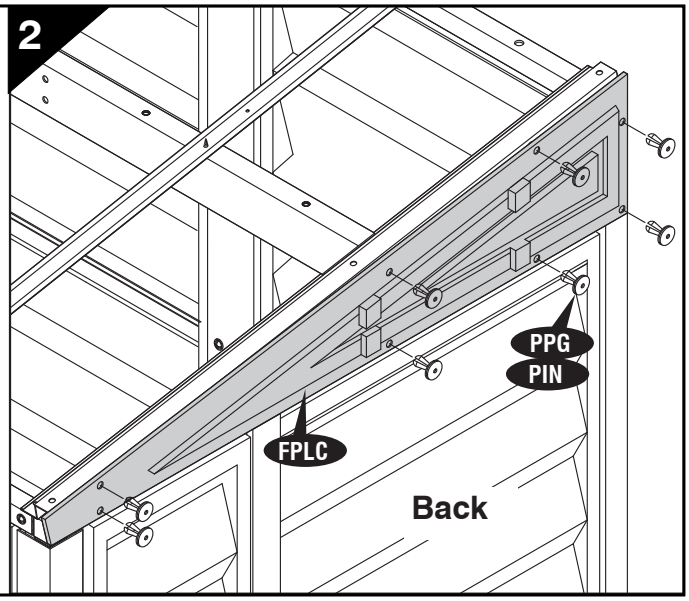

Note

Use a Screw driver to align the holes. Insert roof plugs & roof pins into roof panels only indicated.

Note

Apply silicone around the roof plugs. This is optional and should be done for heavy rain areas if needed.

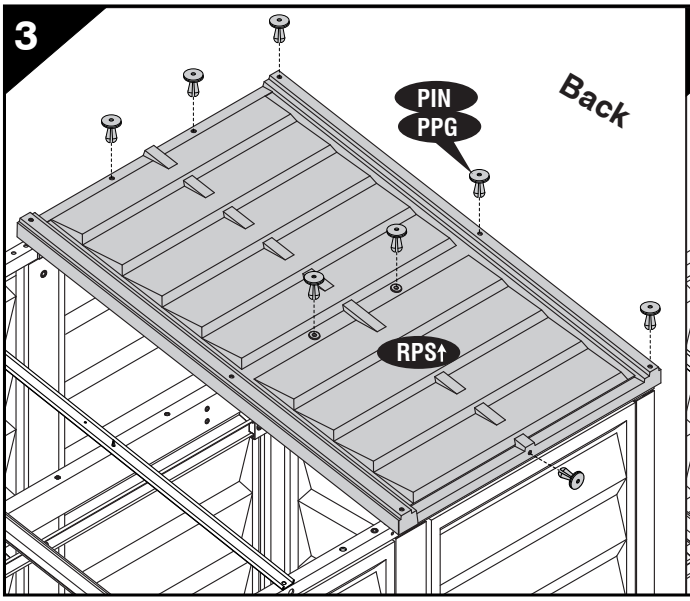

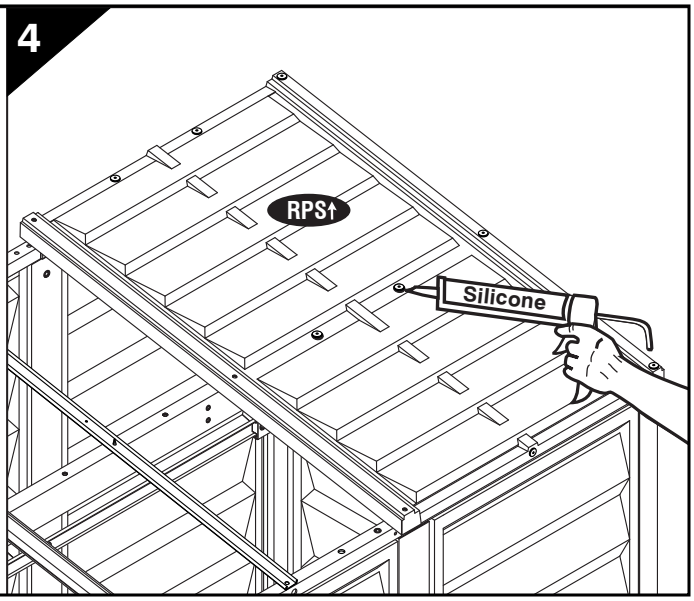

5

Roof Panel installation by using ladder from inside at missing Panels.

Note

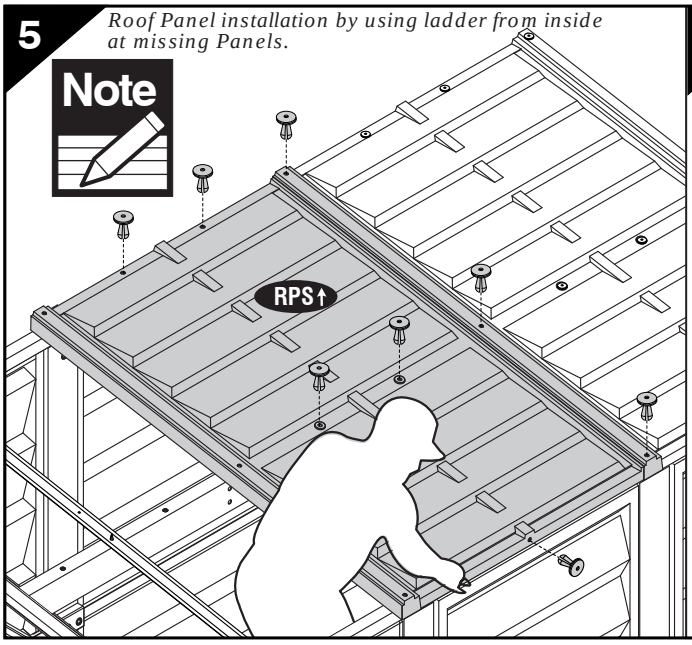

6

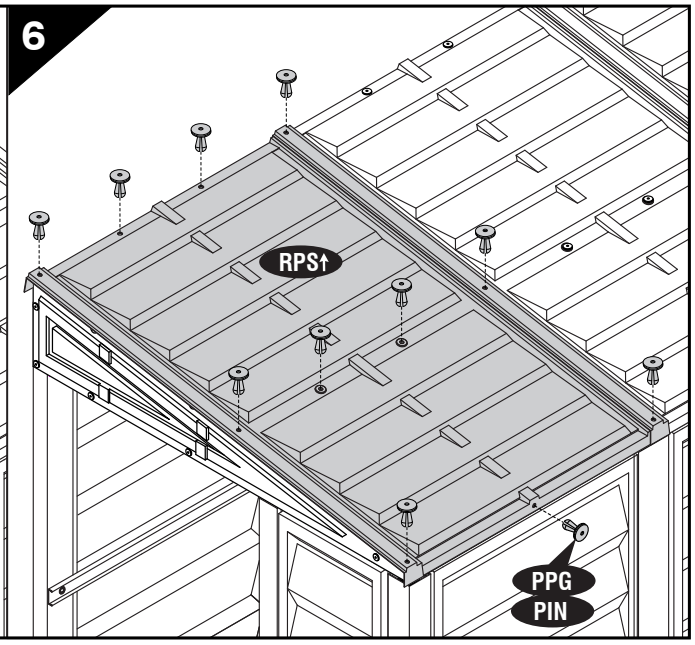

7

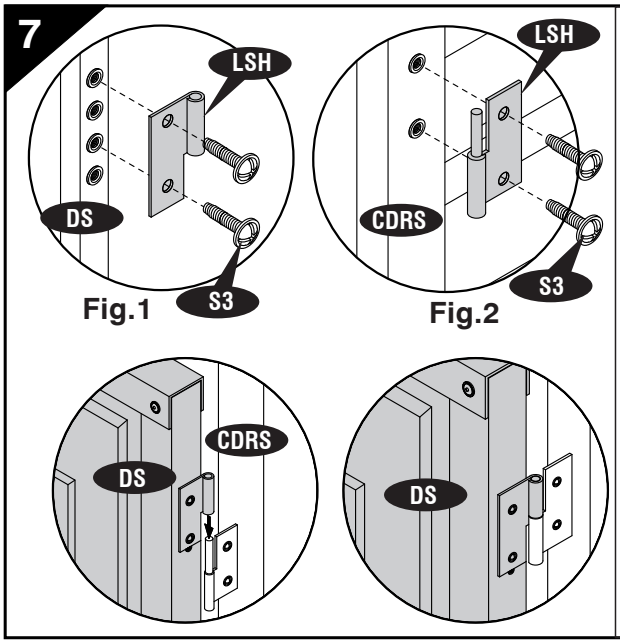

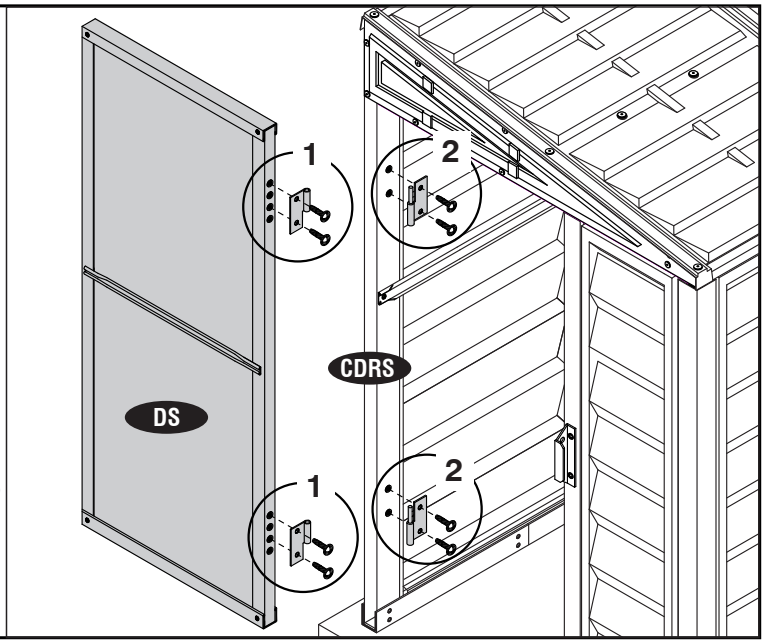

8

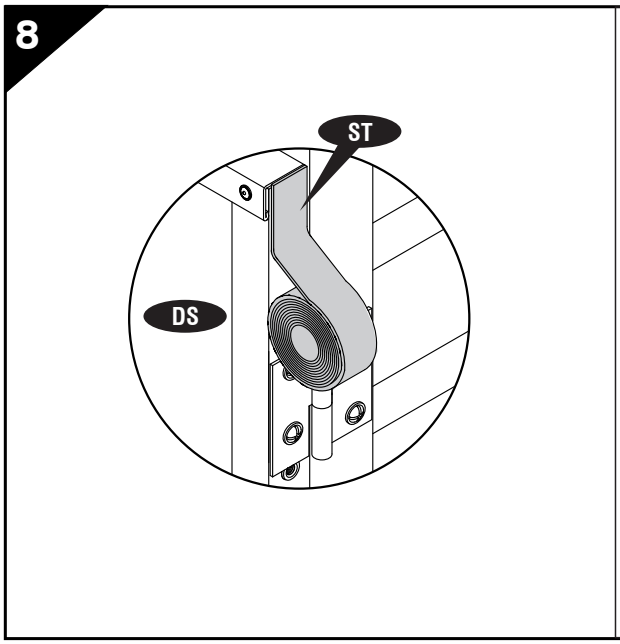

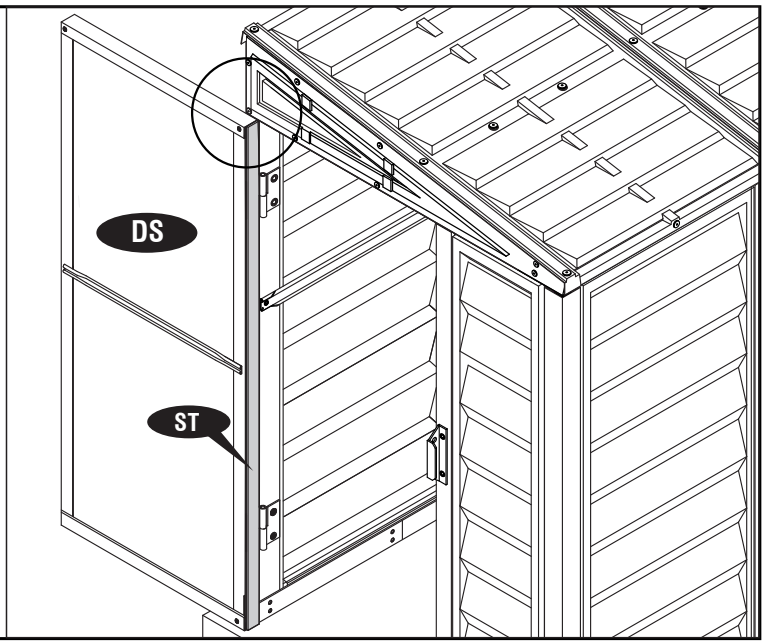

Note

Apply silicone around the perimeter of the base 'U' channel. Seal the corners, joints and base of door column. This is optional and should be done for heavy rain areas if needed.

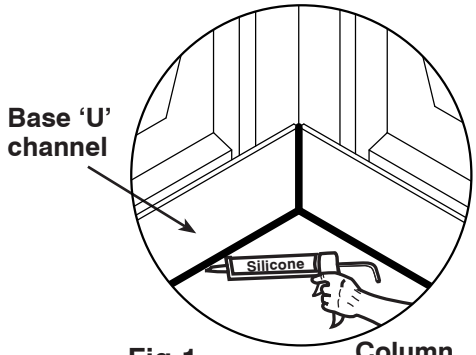

Fig.1

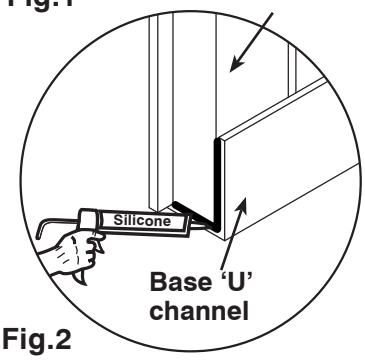

Fig.2

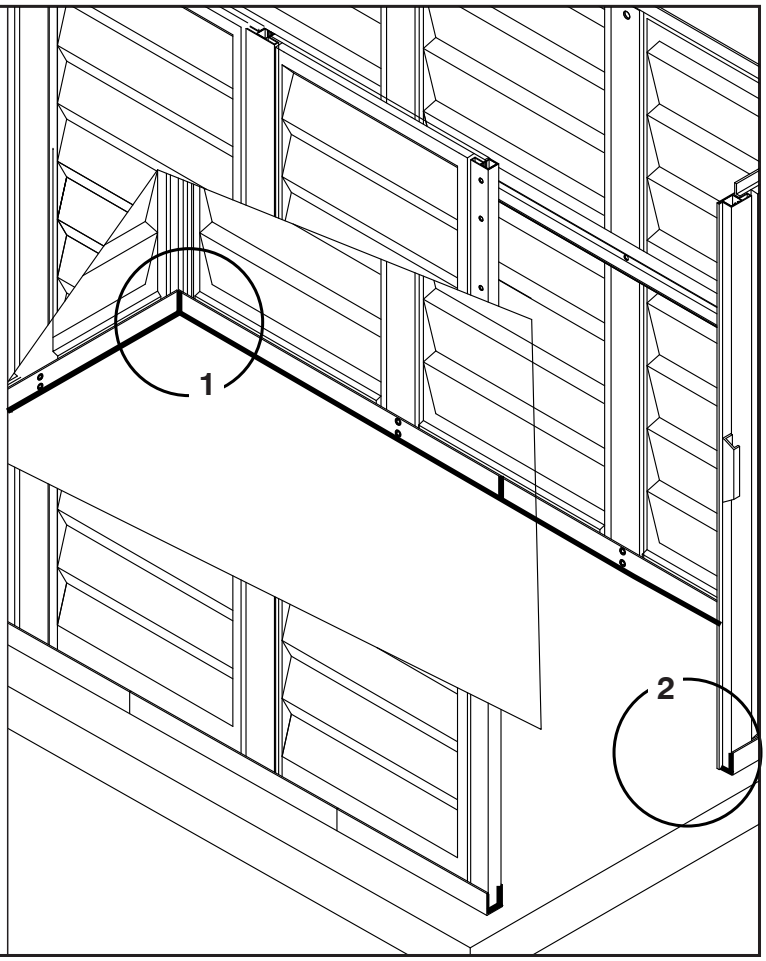

Note

For heavy rain areas, if a duramax foundation kit is not being used, you can fix a weather strip at the bottom of the door.
This is optional and the part is not included.

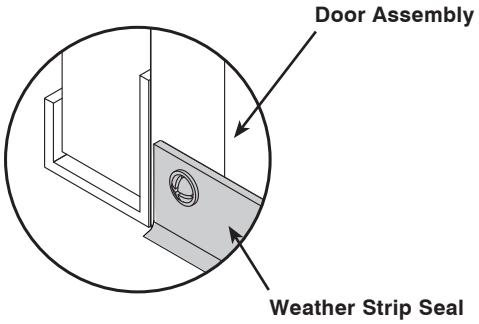

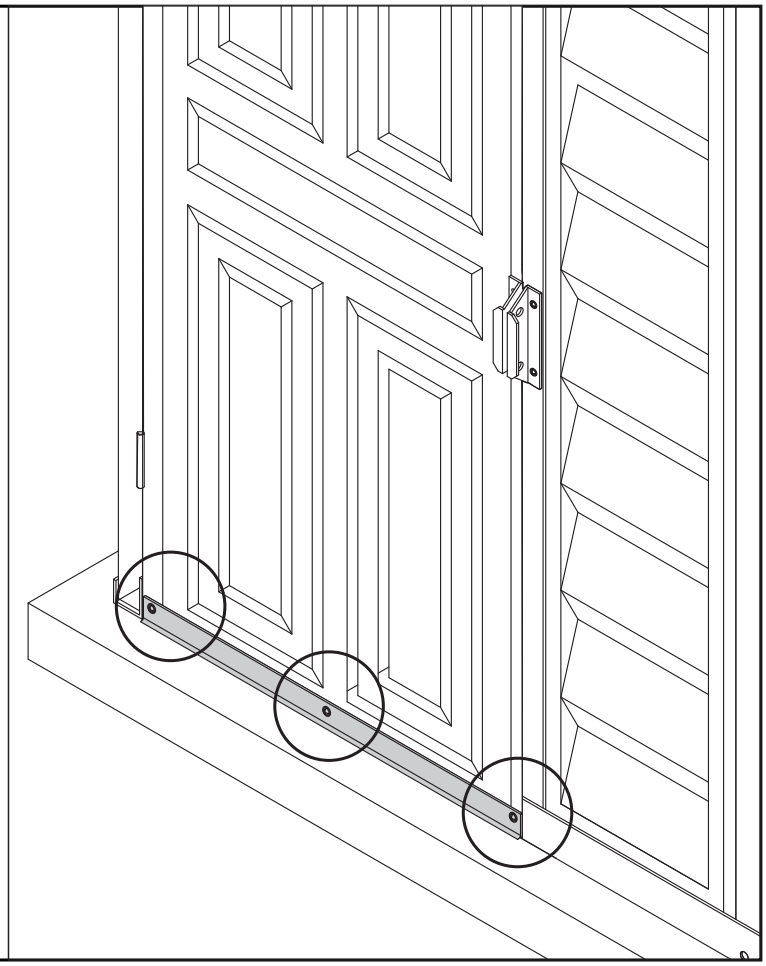

F. Ventilation Kit

Parts Needed:

CODE	QTY
VC	2
VCP	4

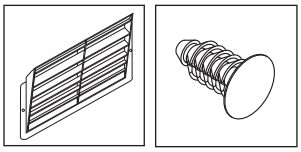

TOOLS YOU WILL NEED

Power Drill
Dia 3/16” (5mm) drill bit
Dia 1/2” (12.5mm) drill bit

Note

Optional ventilation kits can be installed on any of the wall panels. However, we recomend mounting them on the top of the shed’s back wall.

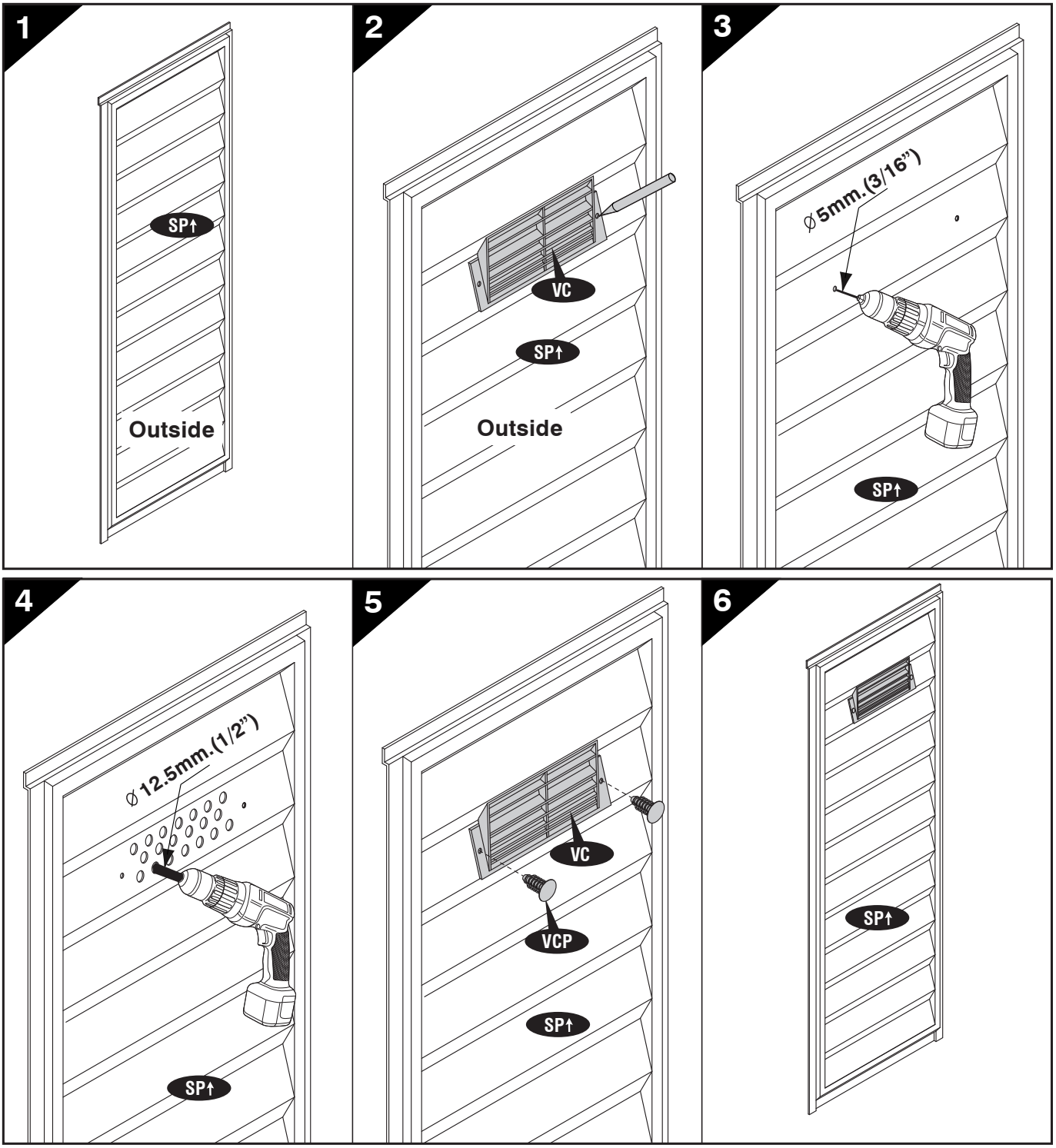

High wind area installation instructions

Note: To ensure that your shed withstands high winds, you will need the following reinforcement.

Parts needed (not included) **:**

CODE	DESCRIPTION	QTY
S4	Dia. 4.2 x 16mm. (5/32” x 5/8”) Sheet Metal Screw	30
S5	M6 x 40mm. (1/4” x 1 1/2”) Anchor Bolt	24

1

Using a carpenter square, line up corners. Align base bars, mark the concrete at the holes in the base and drill concrete with suitable concrete bit to accept 1/4” x 1 1/2” (M6 x 40mm) anchor bolts.

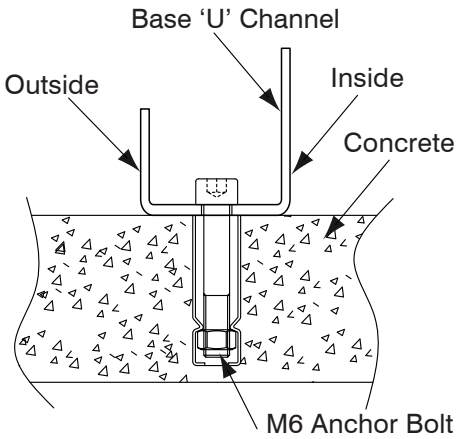

2

Attach each side panel **(SP↑)** on the bottom to the Base U-channel. Using a dia. 3mm (1/8”) drill with a power drill, make two equal distance holes on the Base U-channel through the Side Panel. Drive a self tapping screw **(S4)** through the Base U-channel to the Side Panel.
Repeat this for every Side Panel. See blowup.

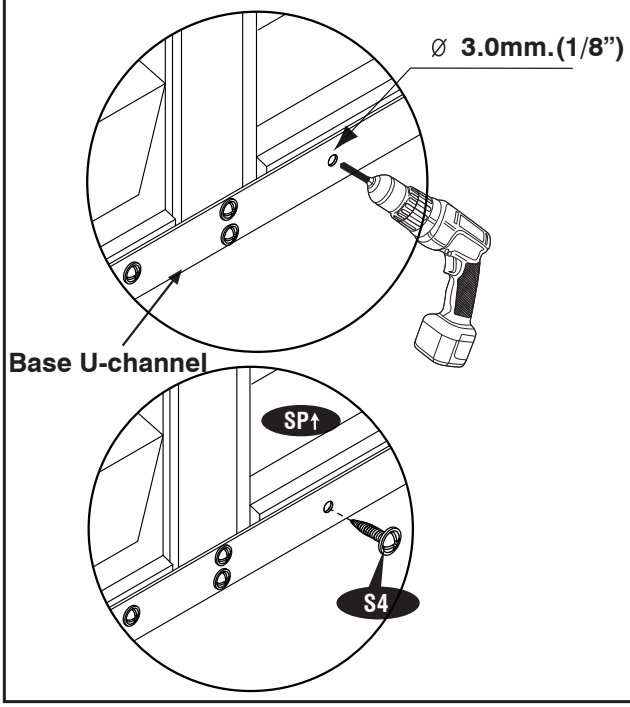

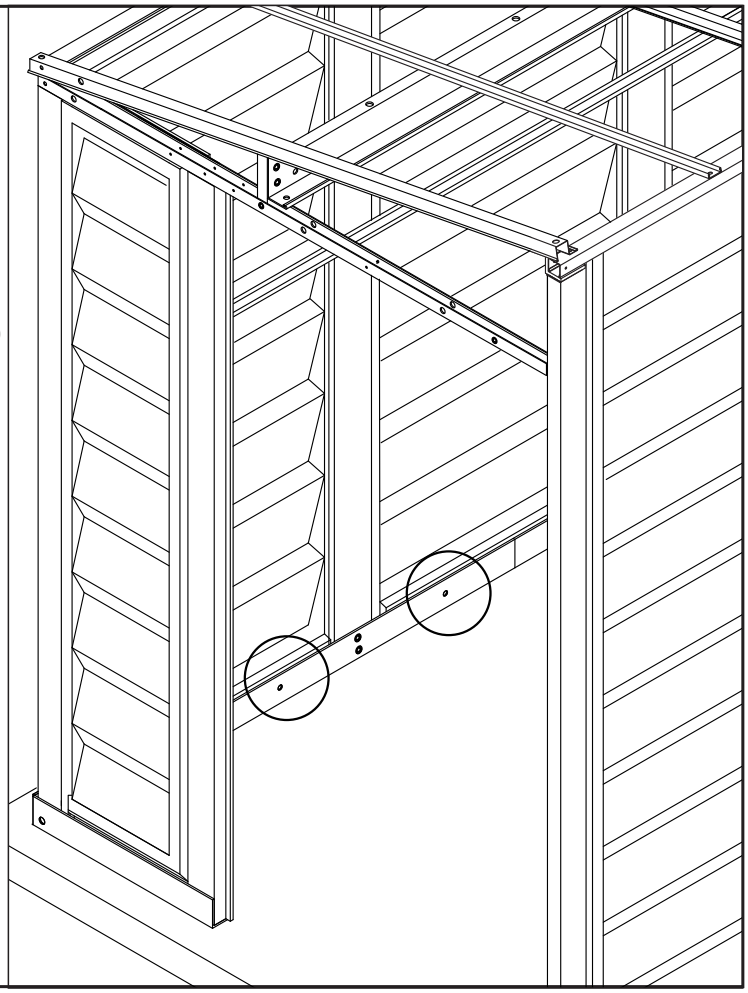

3

Attach each Side Panel **(SP↑)** on top to the Roof Structure **(RS3LH , RS3H).** Use a dia. 3mm (1/8") drill with a power drill, make two equal distance holes on the Side Panel through the Roof Structure. Drive a self tapping screw **(S4)** through the Side Panel to the Roof Structure.
Repeat this for every Side Panel. See blowup.

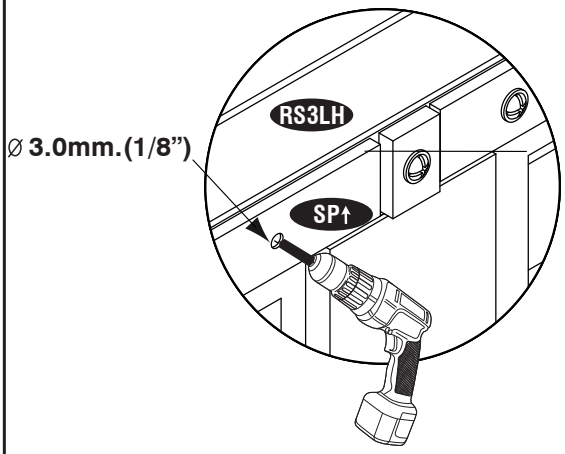

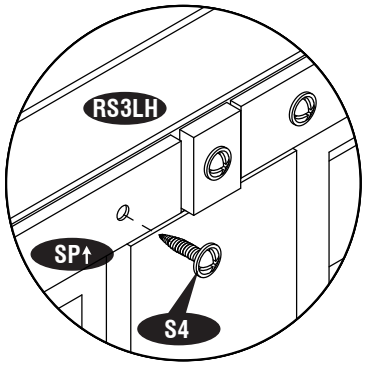

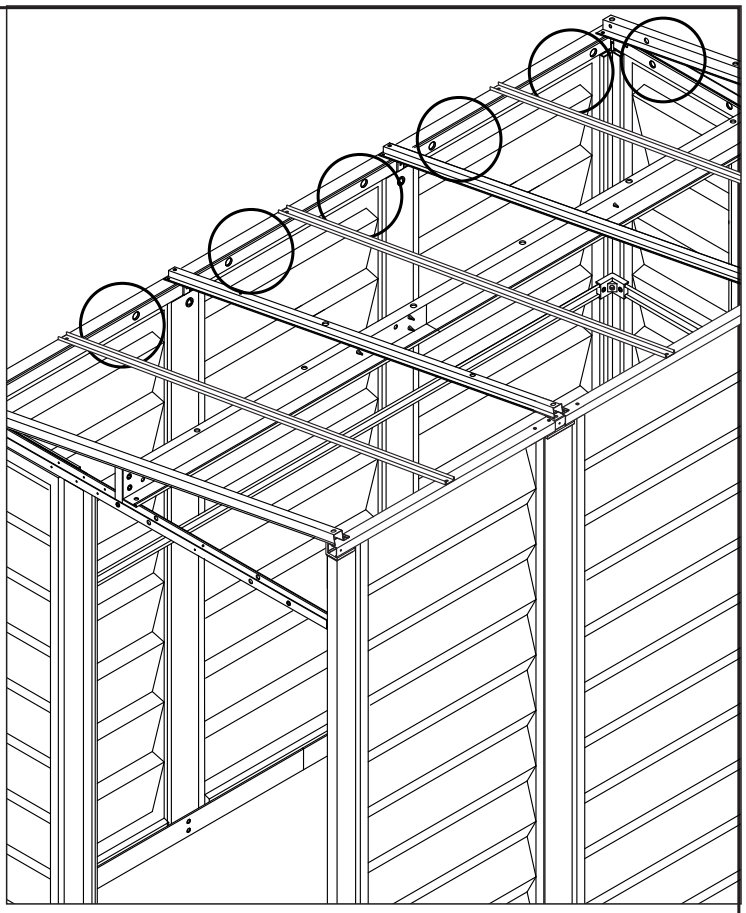

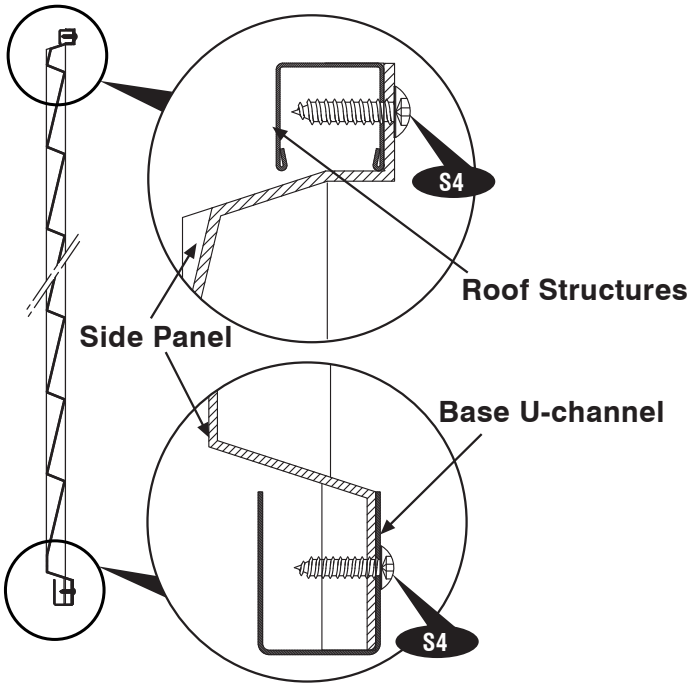

Important Warranty Information

The 'DURAMAX' shed has been tested and passed wind loads of up to 115 mph in a controlled laboratory environment. Natural high wind areas create wind at unpredictable speeds that are very difficult to capture accurately by location. As such we cannot guarantee the performance of the shed in these extreme situations.

"We recommend to clear snow from the Roof top after each Snowfall."

ADDITIONAL ACCESSORIES AVAILABLE

These accessories are required in case of heavy snow or high wind areas. Please choose relevant accessories according to your needs.

ANCHOR KIT (Soil)

Wire rope with twist augers for sheds installed with foundation (Wood / Metal) on soil.
For heavy wind area.

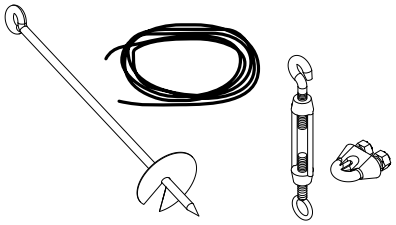

ANCHOR KIT (Concrete)

Eye bolt with wire rope for sheds installed with foundation (Wood / Metal) on concrete.
For heavy wind area.

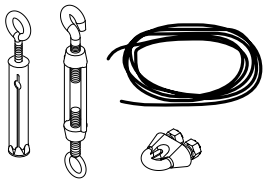

ANCHOR KIT (Foundation)

Strap clamping for shed assembly with foundation (Wood / Metal) on concrete.
To prevent shed from displacement.

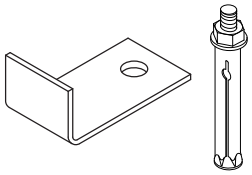

SHELF KIT

Easy mounting system on the middle column.
6 inch wide reinforced PVC shelf with end caps.

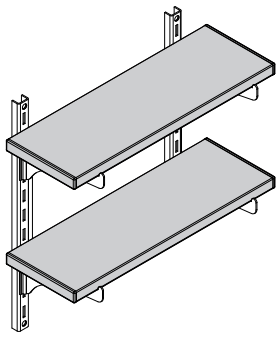

U.S. P olymers, Inc.
1057 S. Vail Ave
Montebello, CA 90640,
United States of America