Overlap Apex Shed
7' x 5'

IMPORTANT, RETAIN FOR FUTURE REFERENCE; READ CAREFULLY

This buildings is pressure treated to ensure longevity of all timber components and to protect against rot. This may leave a colour difference on some parts that will even out as the moisture content stabilises. This will not need additional treatment.

- Timber is a natural material. It will shrink and swell as a result of varying moisture content.
- Due to the nature of the material the doors may need some trimming for a neater fit.
- Please keep all plastic bags and small parts away from children
- The roof of this building is not a load bearing structure.
- This product must be built on a solid level base.

Technical Help line: **0333 7777 089** 8.30 am and 5.00 pm Monday to Friday.

Please check all parts prior to assembly

Assembly of damaged parts may be deemed to be acceptance and this may affect the remedies you are entitled to. If the product is not constructed in accordance with the instructions, or is altered in anyway (e.g. painted), the manufacturer cannot be held liable for any resulting damage.

Fixing Pack (OPA75DDFP)

Not to Scale

This fixing pack is used for several products. There may be additional fixings.

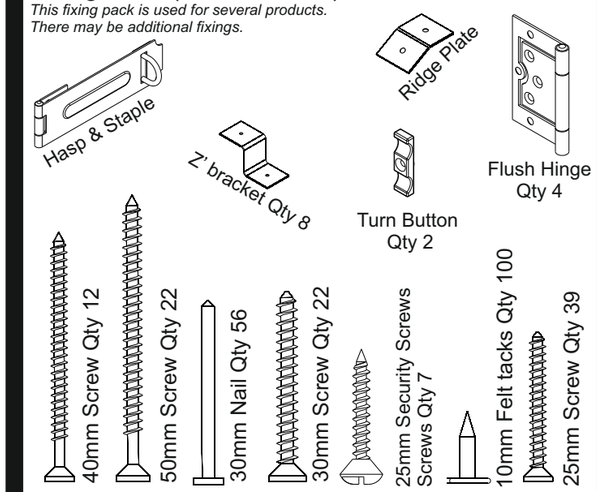

REQUIRED TOOLS : (NOT SUPPLIED)

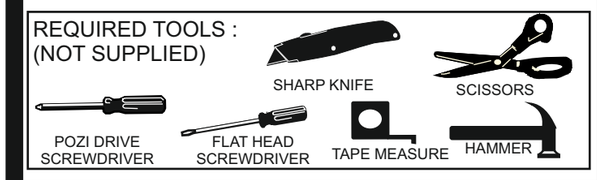

Important : Assembly of this shed requires a minimum of two adults.

Must Pre drill for each screw used.

OPA75 PARTS LIST

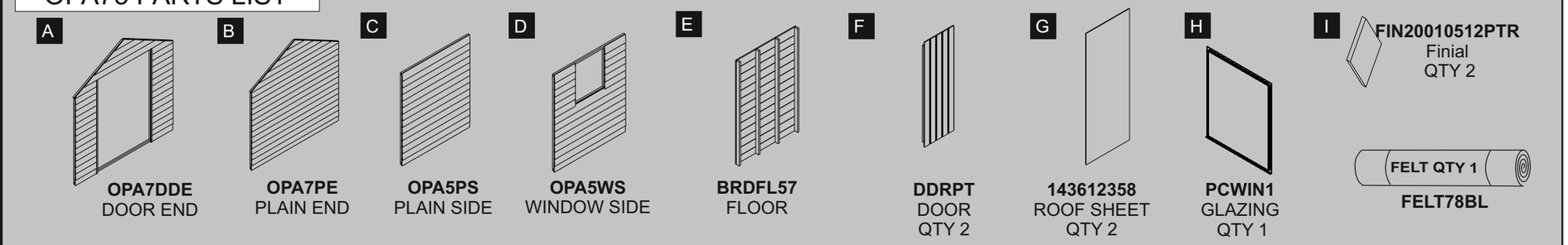

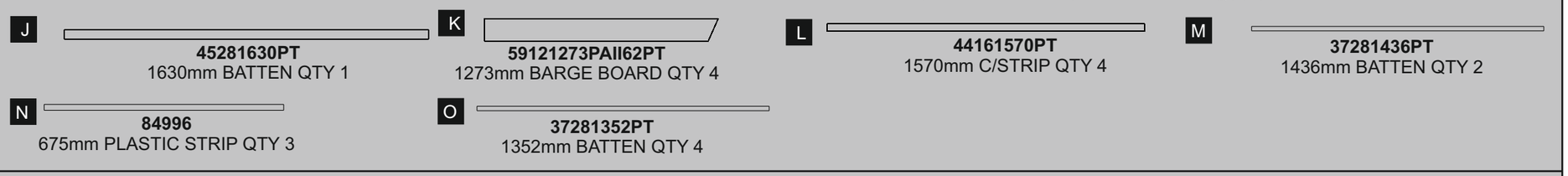

1

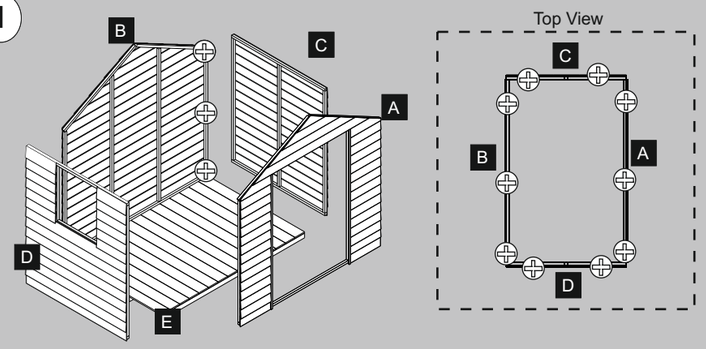

Place the panels on top of the floor. Make sure that all the panels are tight and flush before fixing them to each other using 3x50mm screws.

Make sure that the panels are sitting flush before fixing them to the floor using 50mm screws making sure that all of the screws are positioned so that they locate into the bearers underneath.

3x50mm screws for the end panels.
2x50mm screws for the side panels.

2

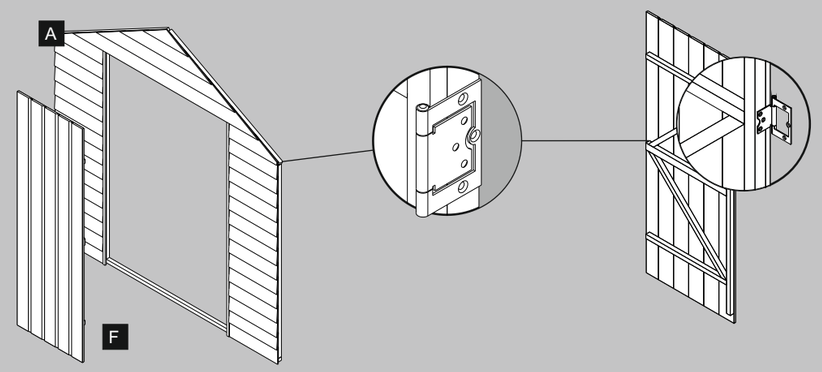

Place the hinge against the inside of the door frame and position the large section of the hinge so that it is flush with the inside of the framing as shown and fix with 25mm screws.

Open the hinge and fix the smaller section to the door framing. Again make sure that the hinge is flush and that the holes are positioned so that the 25mm screws locate correctly into the batten.

3

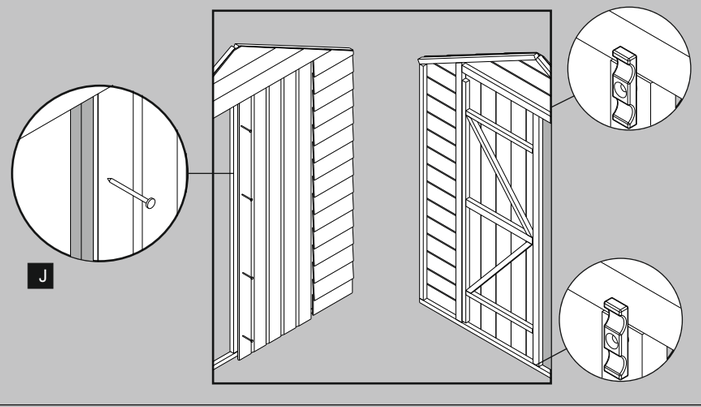

Place the 1630mm batten against the inside of the door so that it is tight against the battens on the reverse and leaves a small gap at the top and bottom. Fix the batten in place with 4 x 30mm Nails hammering through the door into the batten. *(make sure the batten is supported from the other side when fixing)*

Fix a turn button to the top and bottom of the batten so that the door will be held closed when fixed. Use a 30mm screw for each turn button.

4

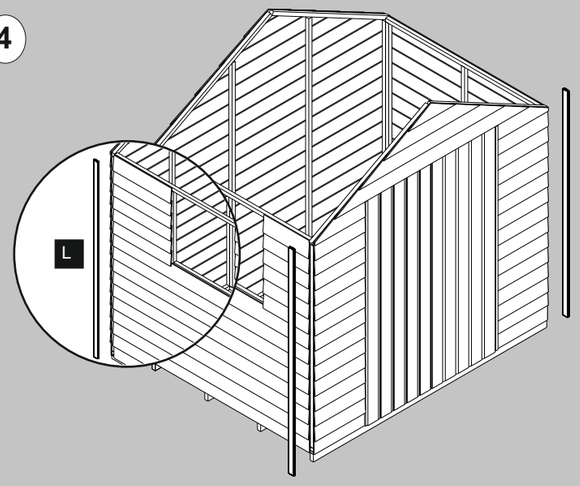

Place the corner strips so that they cover the joins between the panels. Fix each in place using 3 x 30mm screws

5

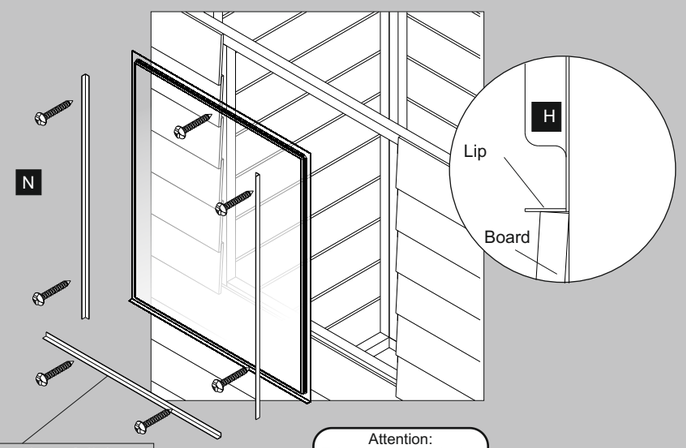

Using scissors (carefully) cut the plastic strips size.

Attention:
Take care when placing the screws. These can not be backed out.

Place the window from the outside so that the lip sits on the bottom board as shown.

Place the plastic strips around the window so that one side butts up against the cladding.

Fix the strips and the window in place using 2 x security screws for each strip and one for the top of the window.

6

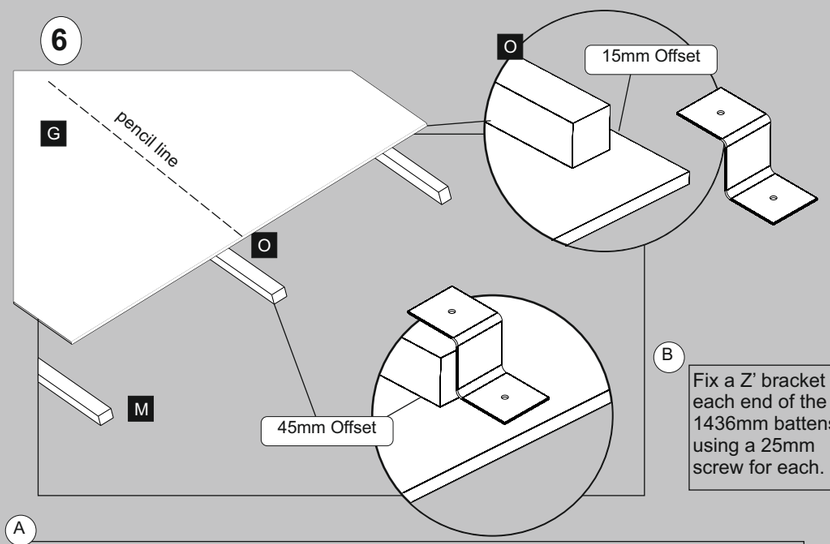

B

Fix a Z' bracket to each end of the 1436mm battens using a 25mm screw for each.

A

Nailing through the roof sheet (G) in to the battens. Position the battens as shown.

1.The 1436mm batten (M) should be flush on all sides.
2.Place a 1352mm batten (O) so that it is offset 45mm on either side and has a 15mm offset on the long side.
3.Place another 1352mm batten (O) in between, again with a 45mm offset on both sides.
Fix each batten in place using 30mm nails spaced in 300mm intervals.

7

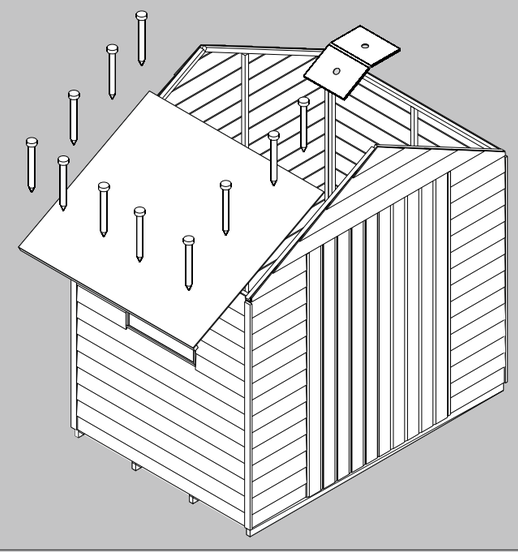

Lift the roof sections into place making sure that they are in line with the apex and the front and back panels of the shed.

Fix the roof in place using 30mm nails spaced in approximately 300mm intervals. (Make sure the nails locate into the framework of the panels)

Fix the ridge plate from inside the shed so that it bridges the two battens at the apex together. Fix using 2 x 25mm screws

8

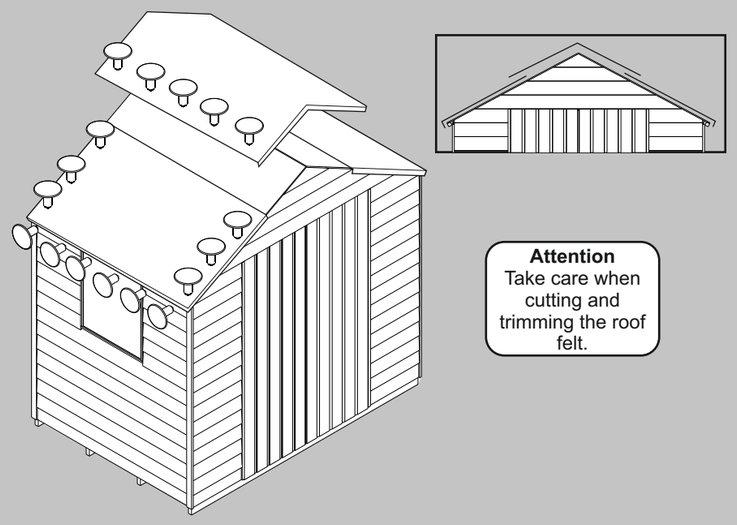

Attention
Take care when cutting and trimming the roof felt.

Unroll the felt and cut it into three equal lengths. Place a section on each eaves so that there is a 50mm overhang on each edge as shown. Fix this to the roof using felt nails spaced in 150mm intervals. Cut and fold the corners securing with a single felt nail for each.

Place the remaining section as shown making sure that the it overlaps the others. Again secure each sheet in place using felt nails spaced in 150mm intervals.

9

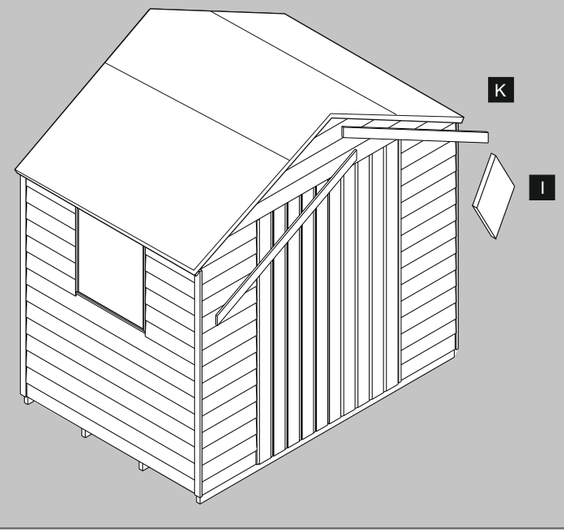

Place the barge boards against the front and back of the shed. Make sure that these are in line with the roof sheet and meet at the apex. Fix each in place using 3 x 40mm screws.

Place the finial over the top of where the barge boards meet and fix it in place using 2 x 30mm screws.

10

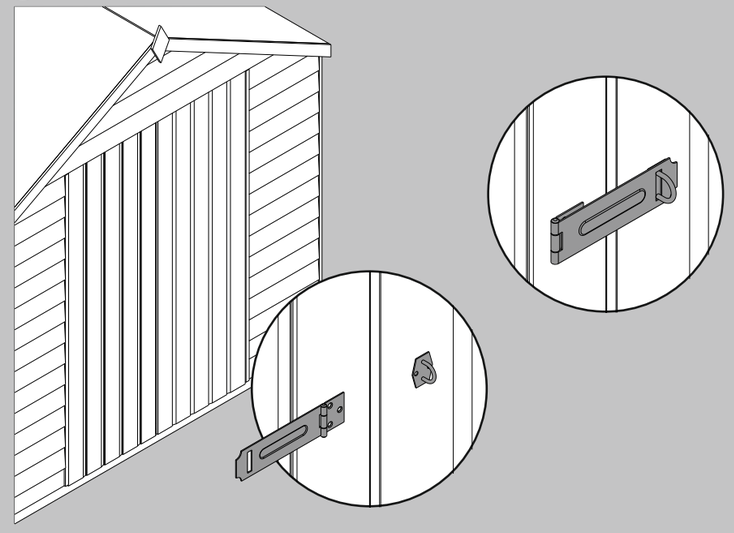

Before fixing the Hasp to the door make sure that it is in line with the framing on the reverse and is positioned so that it will close over the Staple. Fix this in place using 3 x 25mm screws.

Position the Staple opposite, again making sure that it is in line with the framing behind and fix it in place using 2 x 25mm screws.

Biocidal Product Regulation (EU 528/2012) Article 58 Information

This article contains timber treated with Celcure AC-500, incorporating biocidal products to give protection against wood destroying insects & wood rotting fungi.

Contains: Basic copper carbonate (Copper (II) carbonate – Copper (II) hydroxide (1:1)), Boric acid, Benzalkonium chloride.

Wear gloves when handling freshly treated wood. Avoid breathing dust when cutting treated or untreated wood. Dispose of off-cuts responsibly – do not burn.

Maintenance.

Regularly check that all fixings are secure.

The roofing felt has no holes or tears.

There are no splits in the wood and any large splinters removed.

Forest Garden Ltd, Unit 288 Hartlebury Trading Estate, Hartlebury, Worcestershire, DY10 4JB