Eden Greenhouses

Birdlip

(4'10" WIDE)

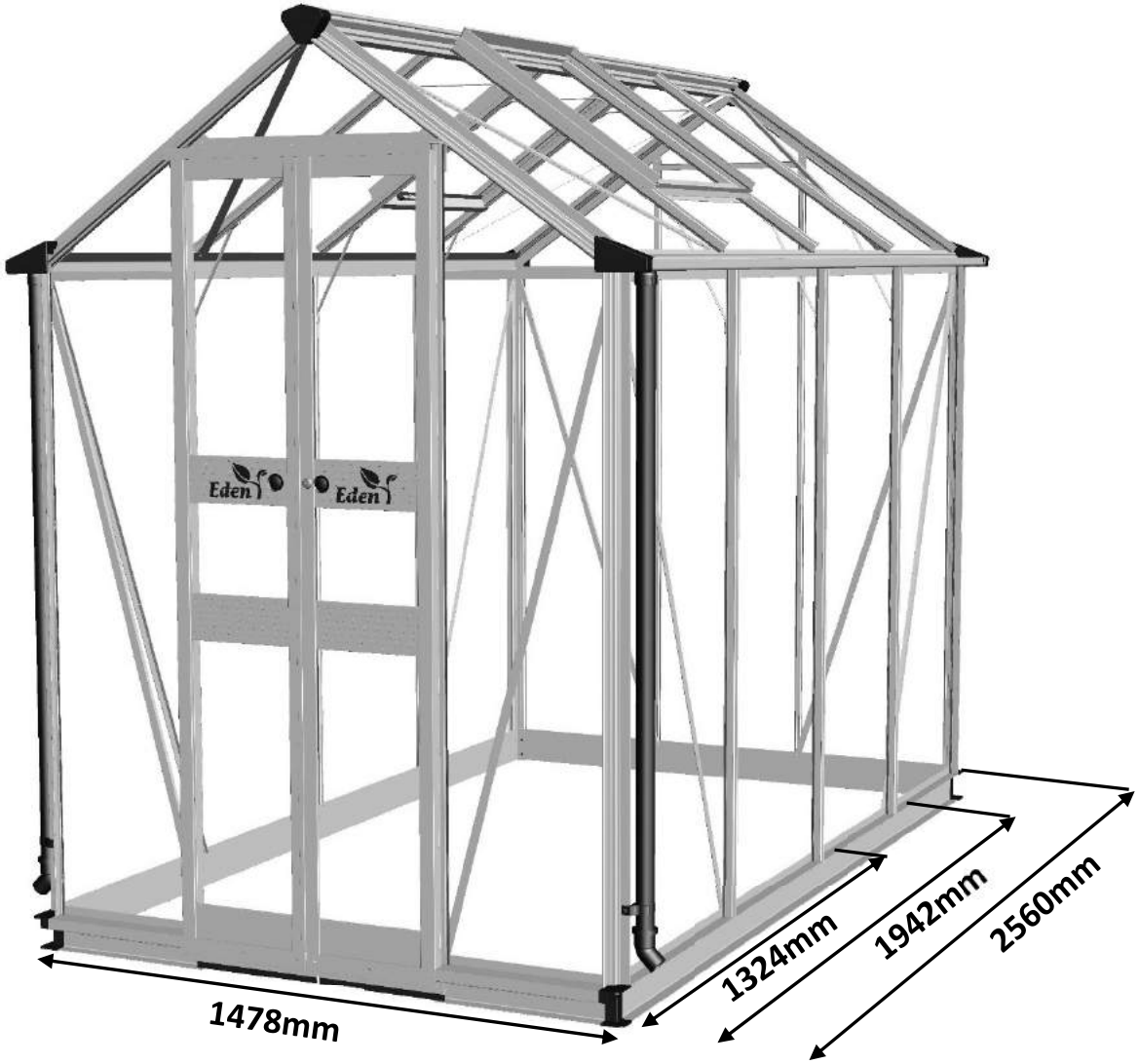

www.edengreenhouses.com

Customer Helpline: +44 (0)1242 676625 **Mon – Fri 9:00am – 5:00pm** **mail@eden-greenhouses.com**

Dear Customer,

Congratulations on purchasing your new Eden greenhouse.

Before you start, please read this instruction booklet carefully. The components for your greenhouse are in numbered bundles corresponding to the sections in this booklet. There may be more than 1 bundle per section. Build one section at a time. **IF YOUR GREENHOUSE IS POWDERCOATED, TAKE CARE WHEN OPENING PACKAGES NOT TO SCRATCH PAINTWORK.**

NOTE: These instructions are for more than one length of greenhouse.

Precautions

- Please allow plenty of time for construction.
- Assembly must be carried out in dry and calm weather.
- A minimum of two people are required to construct the greenhouse.
- We recommend using the tools supplied to tighten bolts. Electric drills can lead to cross threading issues and bolts shearing.
- Place step ladder on level ground.
- Extreme care should be taken when handling glass: always use appropriate gloves and goggles while glazing. Greenhouse glass can have sharp edges, especially if there are any breakages.
- Do not, under any circumstances, climb step ladders whilst carrying glass.
- If there are any breakages, pick up broken glass immediately taking care to keep children and pets away until completely cleared.
- We also recommend using protective gloves and goggles when fitting spring wire clips due to the extreme tension. There is a helpful video clip under the "Help and Advice" tab on our website www.edengreenhouses.com .

Tools supplied

1 x Box spanner

1 x 10mm flat spanner

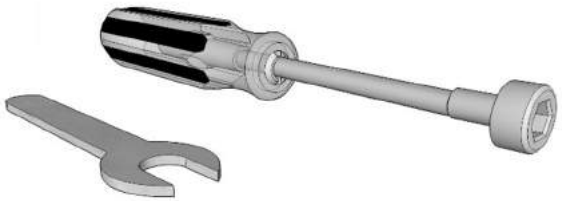

Tools and safety equipment Recommended

- Step ladder
- Drill (anchoring only)
- Spirit level
- Tape measure
- Utility knife
- Scissors
- 7mm socket
- Screwdrivers – flat, PZ2
- Safety gloves
- Safety goggles

Selecting a site

The location of your greenhouse is very important. The structure needs to get as much sunlight as much as possible but should not be exposed to high winds. Try to avoid locating your greenhouse under trees as this will cast shade, which encourages a build-up of algae and falling branches or leaves could cause damage to the structure or block guttering. Sap from trees can make the glazing sticky and dirty so it lets in less light. Creating a level and square base is the most important step in successfully assembling your greenhouse: selecting a site that is already quite level will make the assembly process much easier.

Site preparation

Please refer to the front cover of this booklet for the **OVERALL dimensions** of your greenhouse. If you are siting the greenhouse on earth, you will need to dig 6 holes for the ground anchors, as shown in **SECTION 0, FOUNDATION**, **approx. 300mm deep x 200mm in diameter**. You will need post concrete for the ground anchors and, depending on your soil type, you may need plastic pipes to stop the ground crumbling in on itself. If you are siting the greenhouse on slabs/concrete, cut the ground anchors off with a hack-saw so that they are level with the base as shown in **SECTION 8 LOCATING, pic 2**. To secure the base down pour concrete into pre dug holes with ground anchors situated in place. For slab/concrete foundation, using the L-shaped brackets provided, drill into the concrete/slabs using a 7mm masonry drill bit and secure using 8mm plugs and screws as shown in **SECTION 10 FINISHING**.

Introduction

Base

The integral base must be 100% level and square, the latter can be done by checking the 2 diagonals are equal. If it is not square the glazing will not fit.

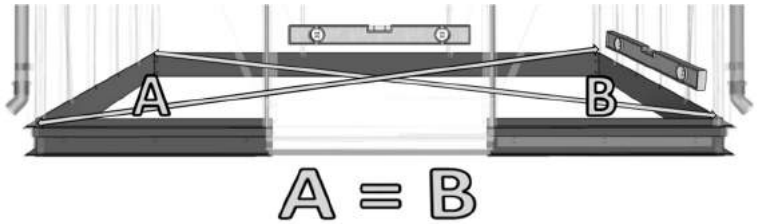

Construction

COMPONENTS LIST
SECTION 0 FOUNDATION
SECTION 1 REAR GABLE
SECTION 2 FRONT GABLE
SECTION 3 SIDES
SECTION 4 ASSEMBLE
SECTION 5 ROOF
SECTION 6 WINDOWS
SECTION 7 DOOR
SECTION 8 LOCATING
SECTION 9 GLAZING
SECTION 10 FINISHING

For each section, lay the profiles out on the ground in the same way as pictured in the main diagram. Assemble in the order of the pictures.
M6 x 10 bolts/nuts (parts 50 and 51) are not listed on individual parts lists as they are used in each section.
The following symbols show whether an illustration is viewed from inside or outside the greenhouse:

Viewed from the inside
(White background)

1

Viewed from the outside
(Black background)

1

Take note of where you will need to slide **extra bolts** into the channels for fixing horizontal bars, bracing or roof vent sills as per example picture to the right.

Fasten the profiles together by sliding the square headed bolts into the channel of the profile and attach to the hole in the corresponding bar. Do not tighten the nuts completely until the completed frame is square. **NOTE THAT ALL CONNECTING PROFILES MUST BE FLUSH AND TIGHT TOGETHER TO ENSURE THAT LEAKING IS KEPT TO A MINIMUM.**
The door has a zero threshold™. Component 19 at the base of the door on the front gable (**SECTION 2 FRONT GABLE**) is used as a brace to gauge the distance between the two components 18 and to make construction easier. This will then be removed in **SECTION 10 FINISHING**.

Glazing

Glazing must be completed in one operation. Fit the rubber glazing gasket to all the profiles as shown in **SECTION 8, LOCATING** before fitting the glass. Note there are 3 different plans for glazing: horticultural glass, toughened glass or polycarbonate. Glaze the roof first, then sides and gable ends. Glaze roof vents before sliding in from **THE END** of the ridge bar as shown in **SECTION 10 FINISHING.** Glaze the door before hanging as shown in **SECTION 7 DOOR**.

Finishing Touches

Fit all plastic parts, i.e. Ridge Cap, Gutter End Caps and Integral Base Corner Caps by pushing into place as in **SECTION 10 , FINISHING**.
Note: Fit Integral Base Corner Caps before securing down the greenhouse.

Maintenance

- The door sliders and lock will need to be lubricated approximately every 6 months with an **OUTDOOR** lubricant to ensure smooth operation.
- The gutters will need to be regularly cleared of leaves and debris to ensure efficient drainage.
- Replace all broken panes of glass immediately, failure to do so may cause structural failure.
- Remove snow loads from the roof.

	POS	Length mm	4x4	4x6	4x8	No.
	1	1492	2	4	6	RP228501492
	2	1264	2			RP2078411264
	2	1882		2		RP2078411882
	2	2500			2	RP2078412500
	3	1264	2			RP137841264
	3	1882		2		RP137841882
	3	2500			2	RP137842500
	4	1609	2	4	4	RP2079111609
	5	1492	4	4	4	RP309331492
	6	1418	1	1	1	RP137841418
	7	1812	2	2	2	RP228501812
	8	1499	2	2	2	RP2079111499
	9	-	6	6	6	RN00310237
	10	1405	1	1	1	RP243251405
	11	400	2	2	2	RP2079110400
	13	832	4	4	4	RP309330832
	14	1521	2	2	2	RP2079111521
	15	-	2	2	2	RN00310417
	16	1757	2	2	2	RP233651757
	18	414	2	2	2	RP137850414

	19	632	2	2	2	RP2079110632
	20	652	1	1	1	RP2079090652-4
	22	1264	1			RP2078401264
	22	1882		1		RP2078401882
	22	2500			1	RP2078402500
	23	832	2	4	6	RP228500832
	24	636	1	2	2	RP309300636
	25	606	2	4	4	RP1070400606-25
	26	610	1	2	2	RP088600610-26
	27	638	1	2	2	RP046940638-27
	28	1738	3	3	3	RP158361738
	29LH	305	1	1	1	RP288960305-LH
	29RH	305	1	1	1	RP288960305-RH
	30LH	305	1	1	1	RP2081140305-LH
	30RH	305	1	1	1	RP2081140305-RH
	31	315	2	2	2	RP309340315
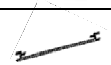	32	305	2	2	2	RP2081140305
	40	300	3	6	9	RP235570300
	42	32,000	0	0	1	RN00300412
	42	64,000	1	1	1	RN00300413
	43	-	100	100	100	N00300210
	44	-	200	200	200	N00300205
	45	4,000	1	1	1	RN00300418

	48	-	2	2	2	RN00300227BK
	50	-	200	200	200	N00300605
	51	-	200	200	200	N00300655
	52	-	2	2	2	RN00310035
	53	-	2	2	2	RN00310453
	54	-	2	2	2	RN00310454
	55	-	1	1	1	RN00310415
	55	-	1	1	1	RN00310416
	58	-	8	12	16	RN00310458
	64	305	6	6	6	RP102640305
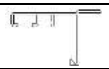	65	1738	1	1	1	RP209171738
	69	1034	2	4	4	RP2079111034
	71	-	1	2	2	RN00300301
	74	-	2	2	2	RN00310450
	78	477	1	1	1	RP2079110477
	90	-	2	2	2	RN00310413
	95-LH	315	1	1	1	RP2079100315-LH
	95-RH	315	1	1	1	RP2079100315-RH
	97-LH	360	1	1	1	RP2079120360-LH
	97-RH	360	1	1	1	RP2079120360-RH
	98	-	6	6	6	N00310020
	100	-	6	6	6	00402

	101	-	2	2	2	N00300422
	102	-	26	26	26	N00300602
	103	-	26	26	26	N00300603
	104	-	4	4	4	N00300604
	105	-	2	2	2	PT200
	106	-	2	2	2	PT204
	107	-	2	2	2	RN00310418
	109	305	2	2	2	RN00310420
	110	-	2	2	2	N00300606
	111	-	1	1	1	RN00310422
	112	170	2	2	2	RN00310426
	113	1400	2	2	2	RN00310428
	114	300	4	4	4	RN00310438
	115	-	2	2	2	RN00310462
	116	-	1	1	1	RN00310463
	117	-	1	1	1	RN00310464
	118		26	26	26	01645
	119		4	4	4	RN00310439
	120		200	200	200	00682BK
	121	-	2	2	2	PT201
H	H	360	3	3	3	12469
H	H	437	2	2	2	12468

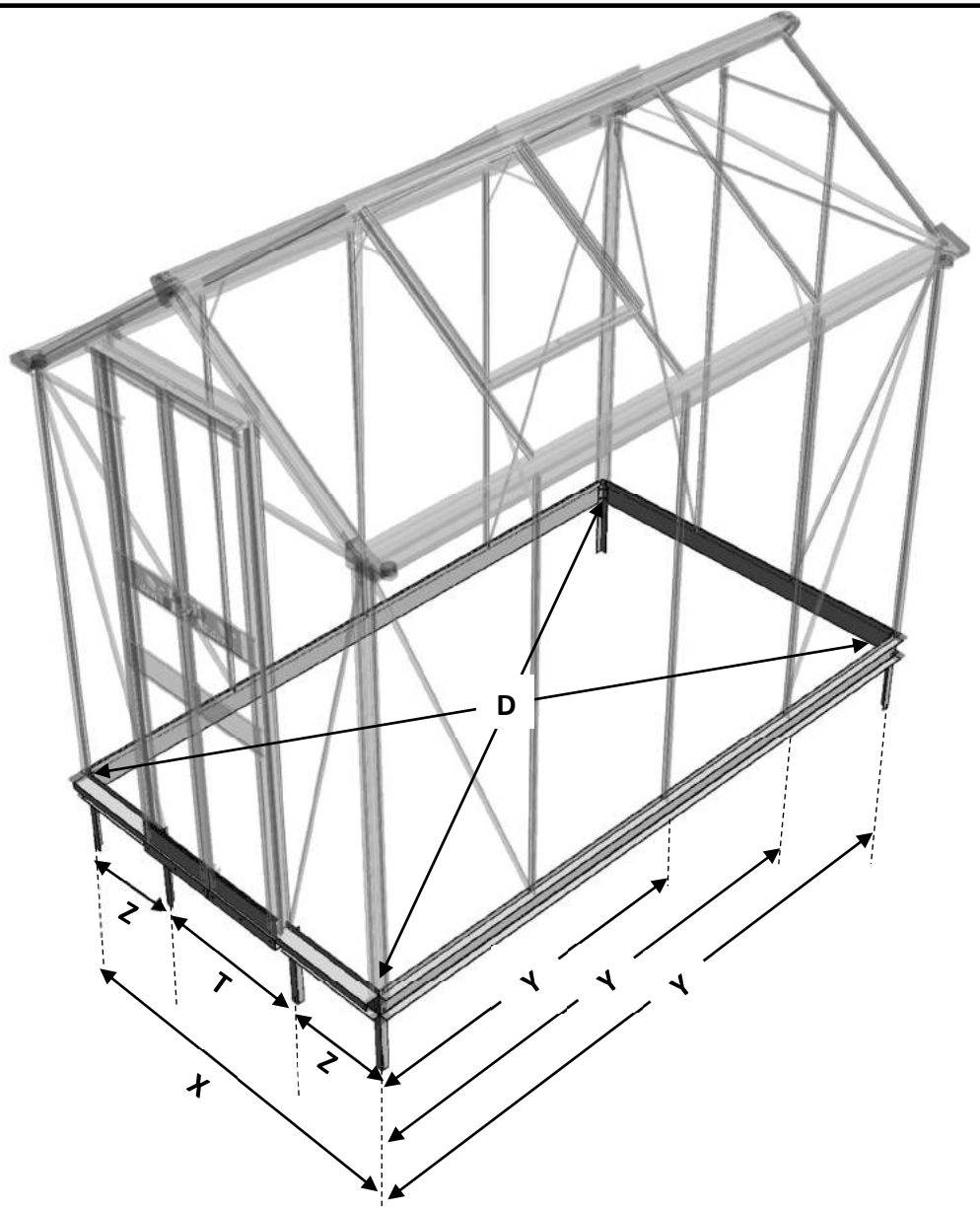

0

	44	46	48
X	1418mm	1418mm	1418mm
Y	1264mm	1882mm	2500mm
Z	414mm	414mm	414mm
T	590mm	590mm	590mm
D	1890mm	2356mm	2874mm

Rear gable - Baggavl - Hintergiebel - Bakgavel - Pignon derrière - Achtergevel - Frontis trasero - Pannello posteriore - Peräpääty

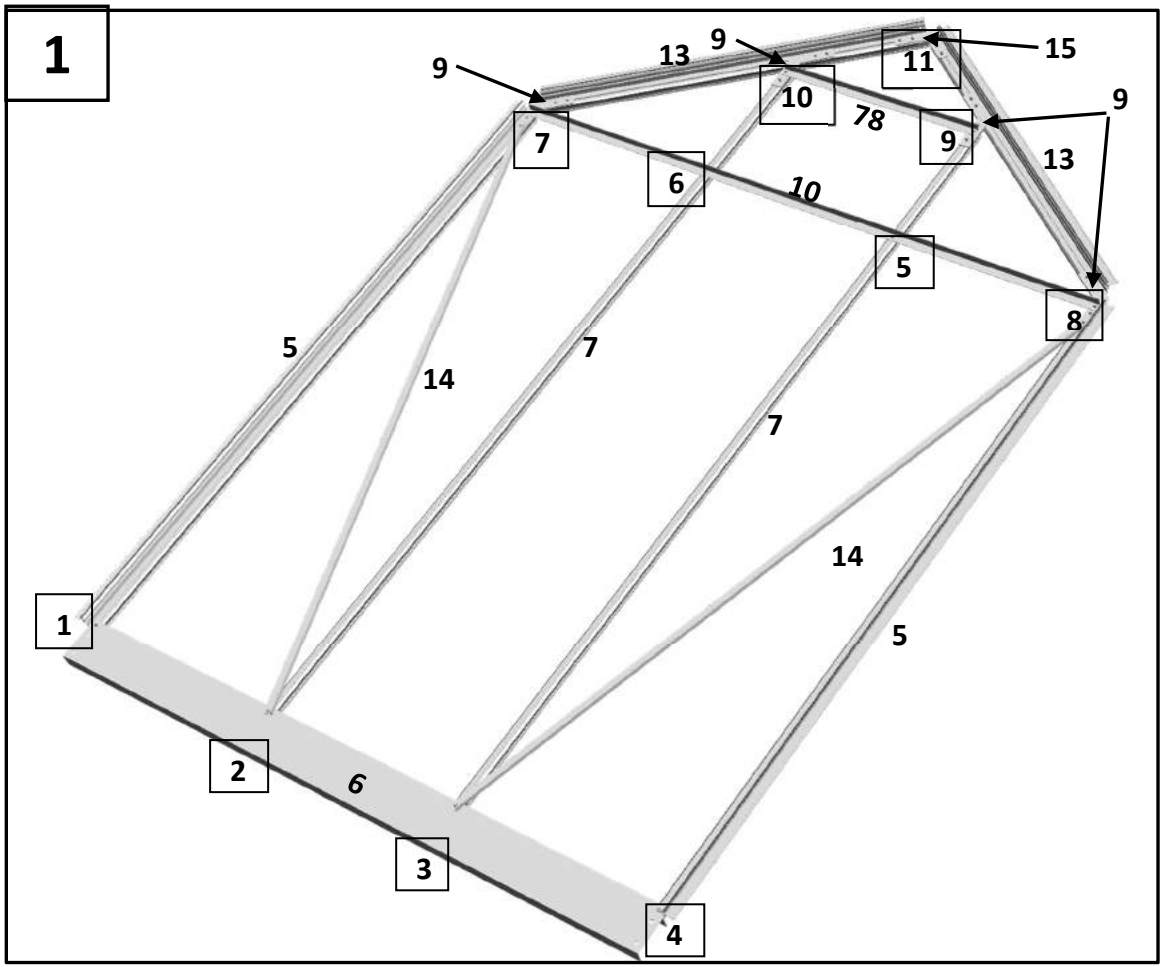

1	#	mm	44	46	48	PART NO.
	6	1418	1	1	1	RP137841418
	5	1492	2	2	2	RP309331492
	7	1812	2	2	2	RP228501812
	14	1521	2	2	2	RP2079111521
	9	-	4	4	4	RN00310237
	10	1405	1	1	1	RP243251405
	15	-	1	1	1	RN00310417
	78	477	1	1	1	RP2079110477
	13	832	2	2	2	RP309330832

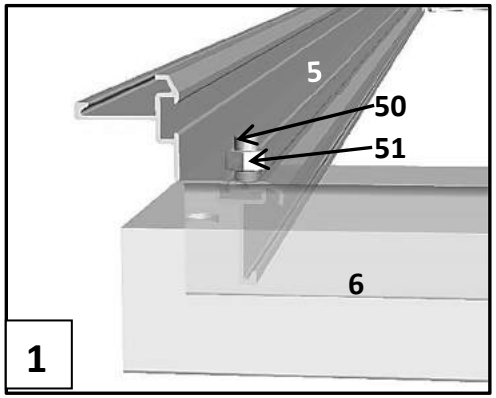

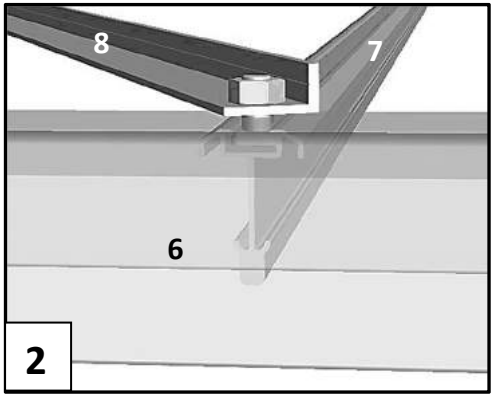

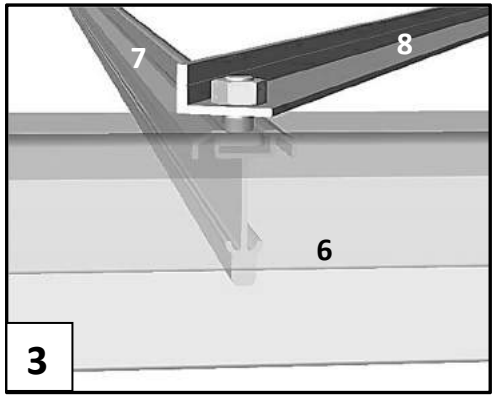

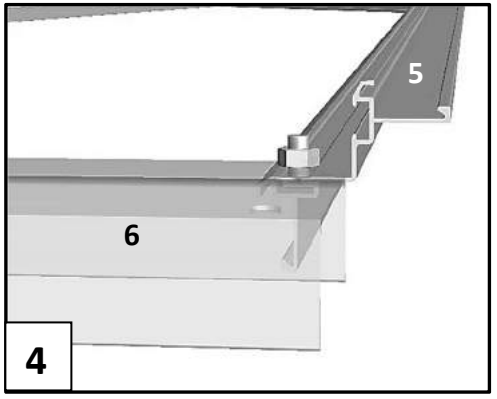

Rear gable - Baggavl - Hintergiebel - Bakgavel - Pignon derrière - Achtergevel - Frontis trasero - Pannello posteriore - Peräpääty

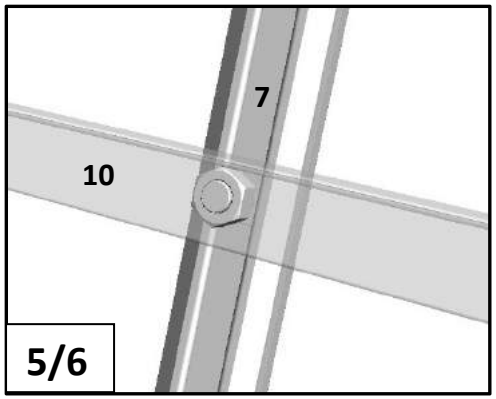

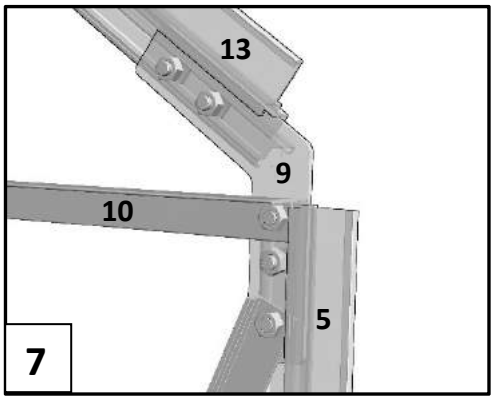

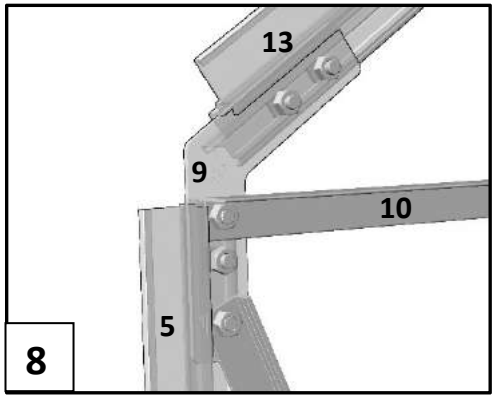

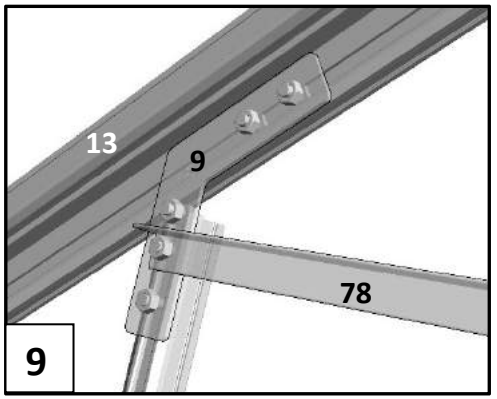

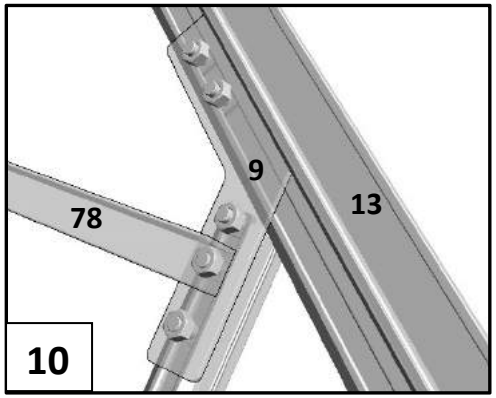

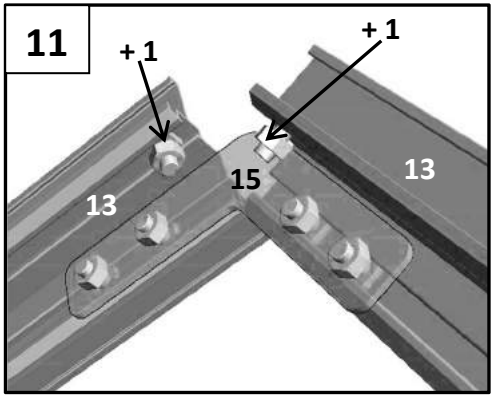

Front gable - Forgavl - Vordergiebel - Frontgavel - Pignon devant Voorgevel - Frontis frontal - Pannello frontale - Ovipääty

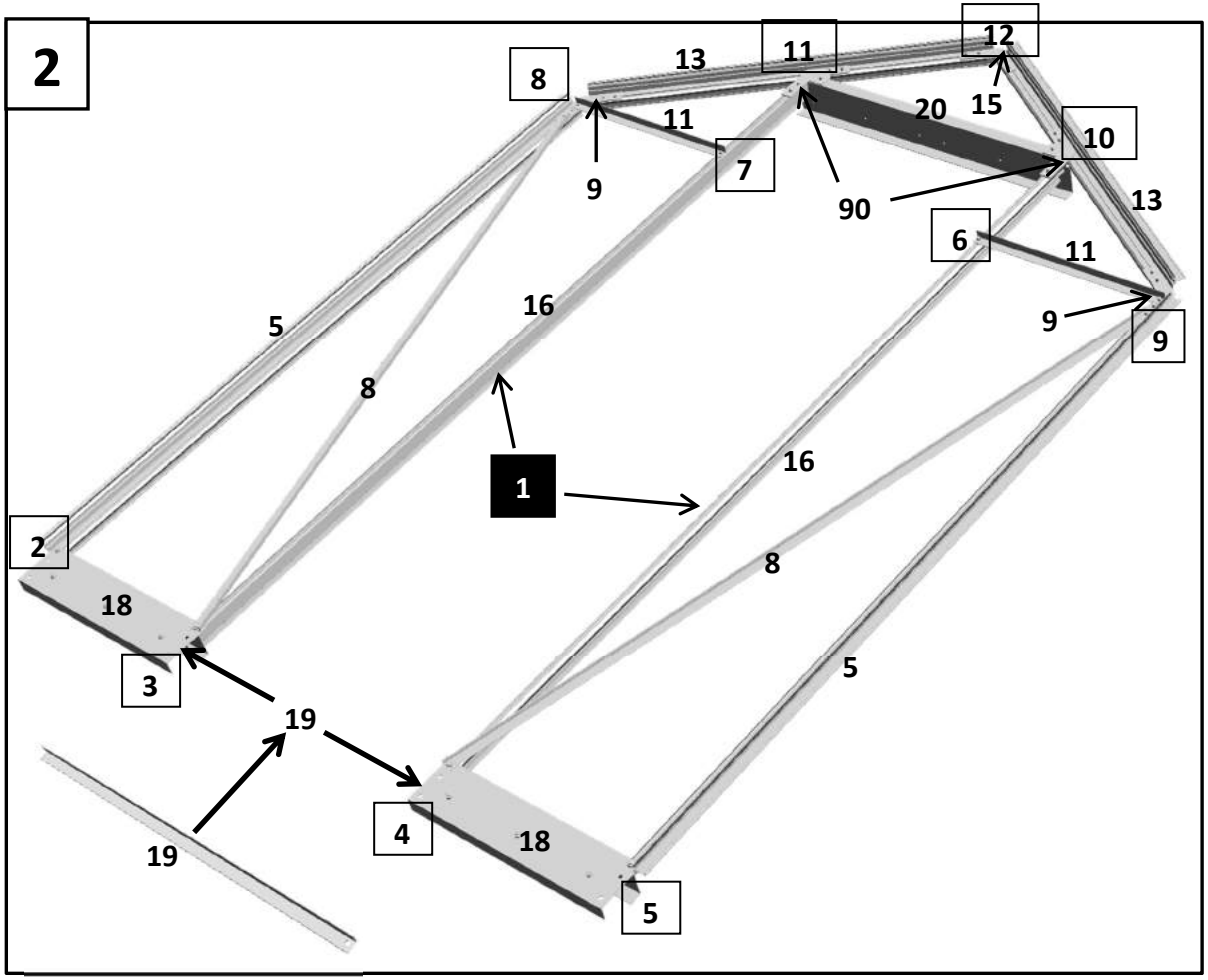

2	#	mm	44	46	48	ITEM NO.
	45	4000	1	1	1	RN00300418
	16	1757	2	2	2	RP233651757
	18	414	2	2	2	RP137850414
	5	1492	2	2	2	RP309331492
	8	1499	2	2	2	RP2079111499
	9	-	2	2	2	RN00310237
	90	-	2	2	2	RN00310413
	20	652	1	1	1	RP2079090652-4
	19	632	1	1	1	RP2079110632
	15	-	1	1	1	RN00310417
	11	400	2	2	2	RP2079110400
	13	832	2	2	2	RP309330832

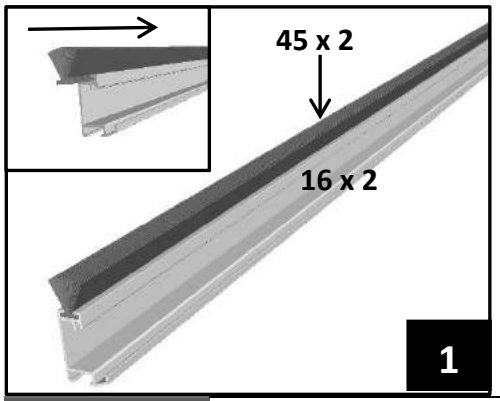

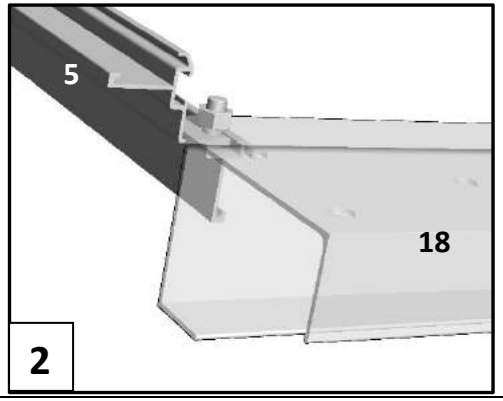

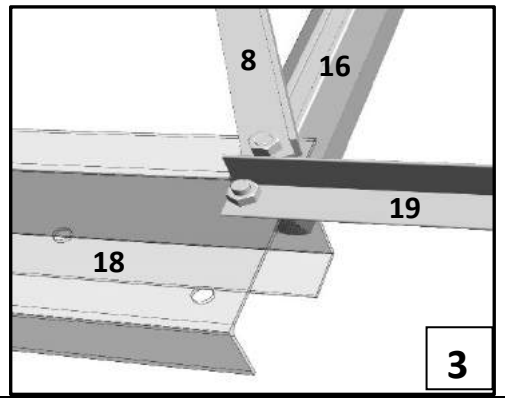

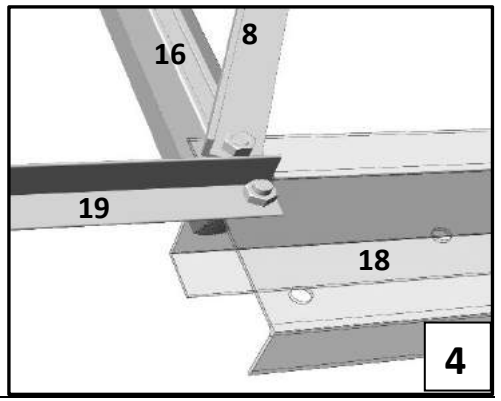

Front gable - Forgavl - Vordergiebel - Frontgavel - Pignon devant Voorgevel - Frontis frontal - Pannello frontale - Ovipääty

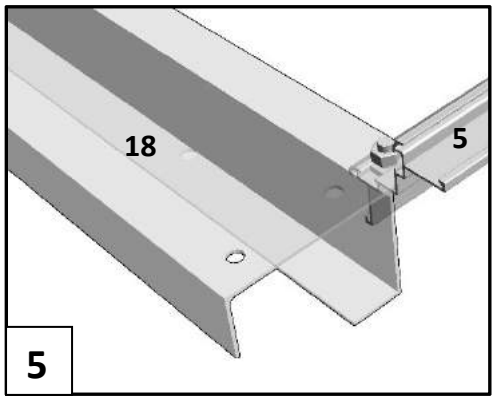

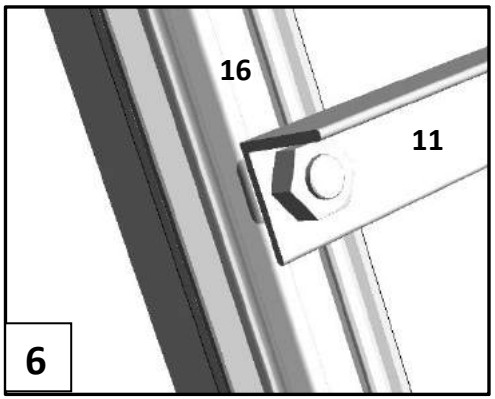

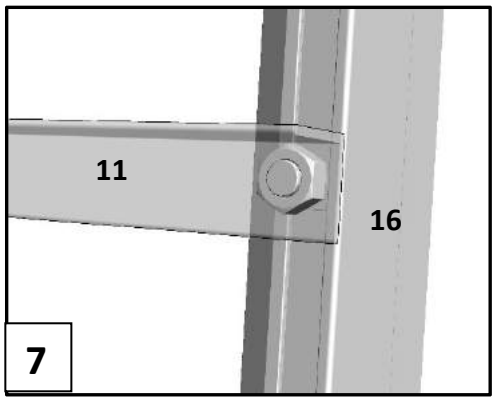

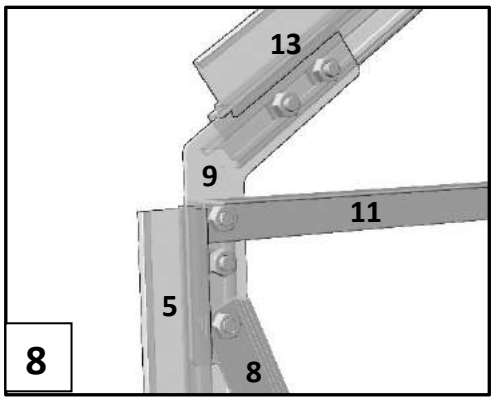

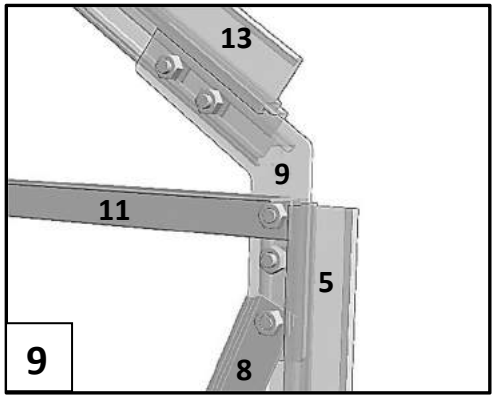

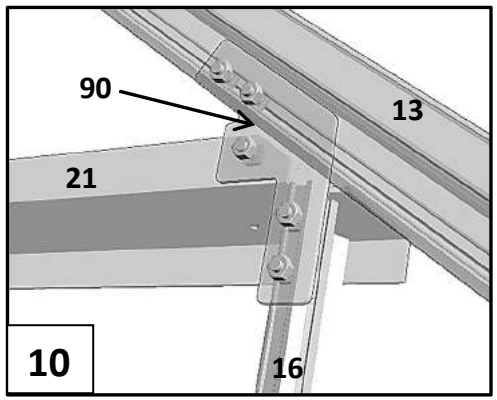

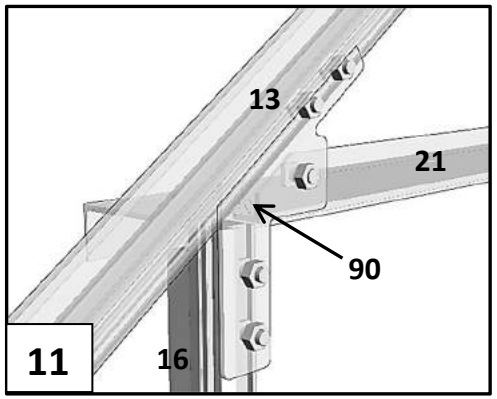

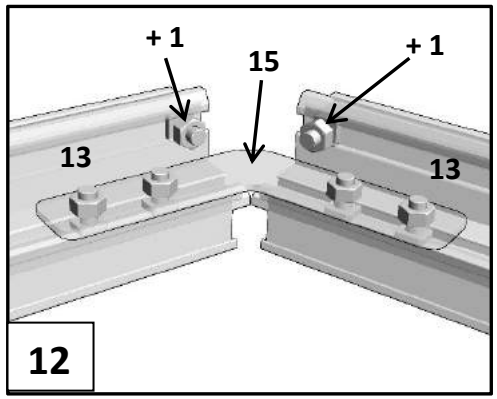

Sides - Sider - Seiten - Sidor - Côtés - Zijkanten
Laterales - Pannelli laterali - Sivut

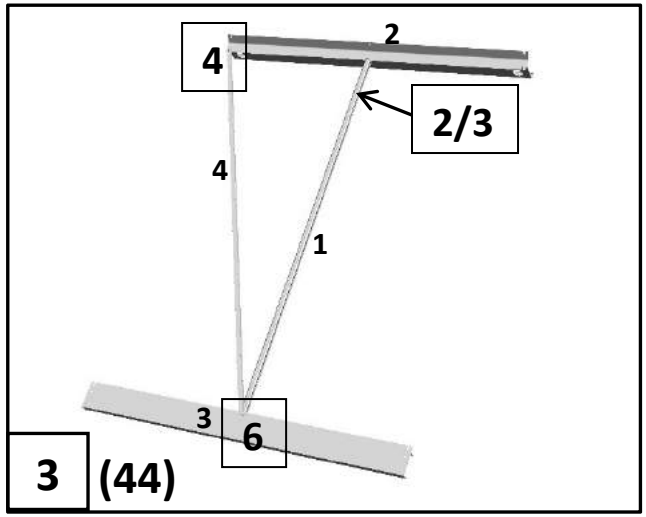

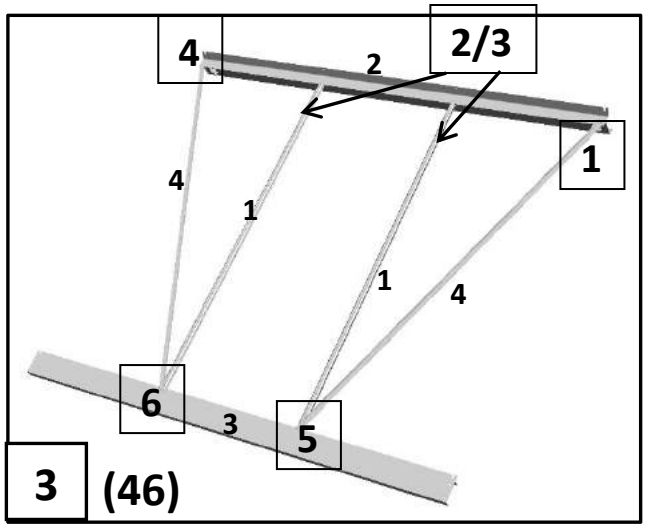

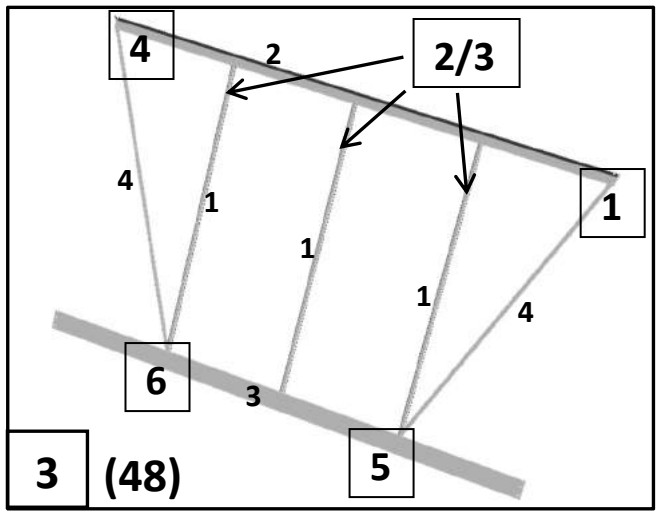

3	#	mm	44	46	48	ITEM NO.
	1	1492	2	4	6	RP228501492
	2	1264	2			RP2078411264
	2	1882		2		RP2078411882
	2	2500			2	RP2078412500
	3	1264	2			RP1378411264
	3	1882		2		RP1378411882
	3	2500			2	RP1378412500
	4	1609	2	4	4	RP2079111609

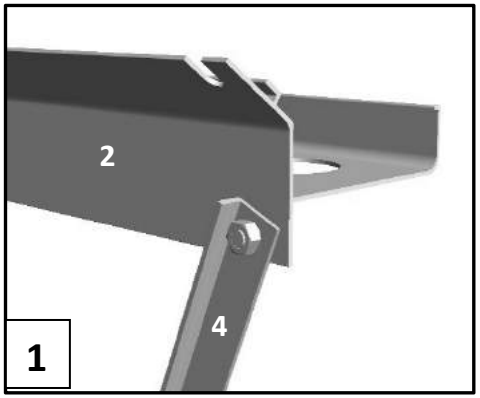

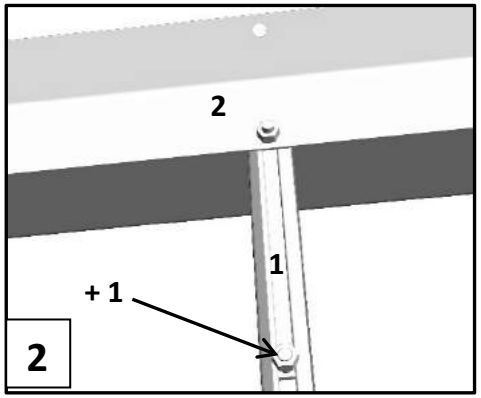

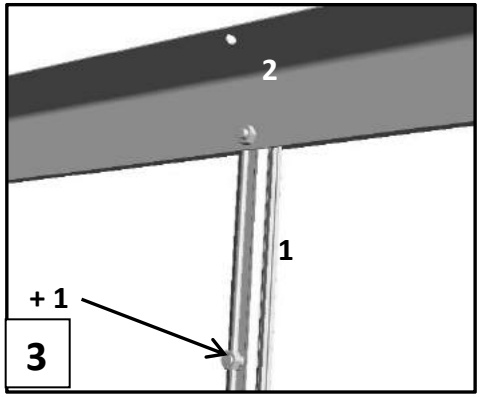

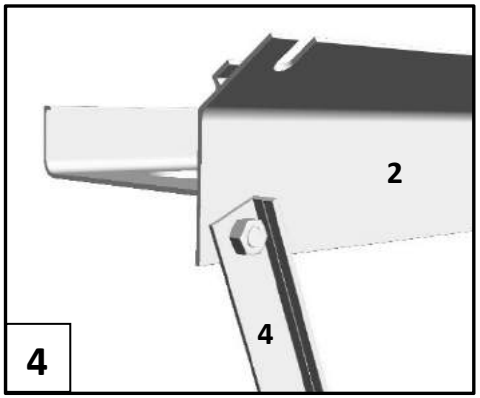

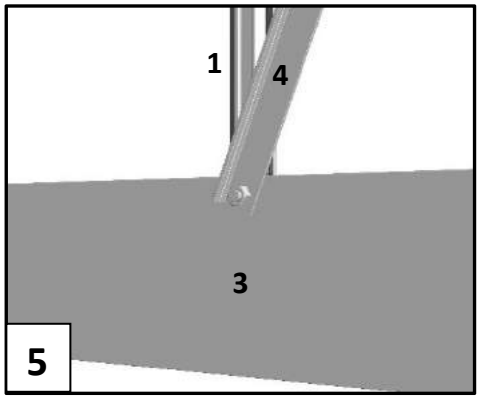

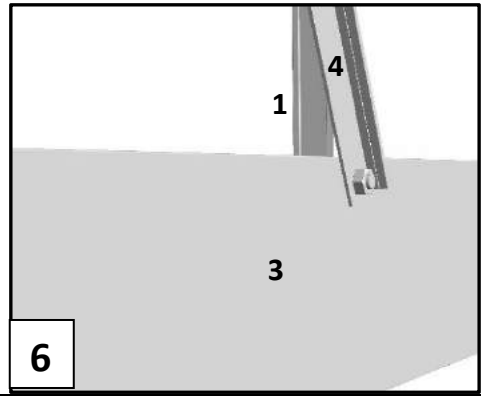

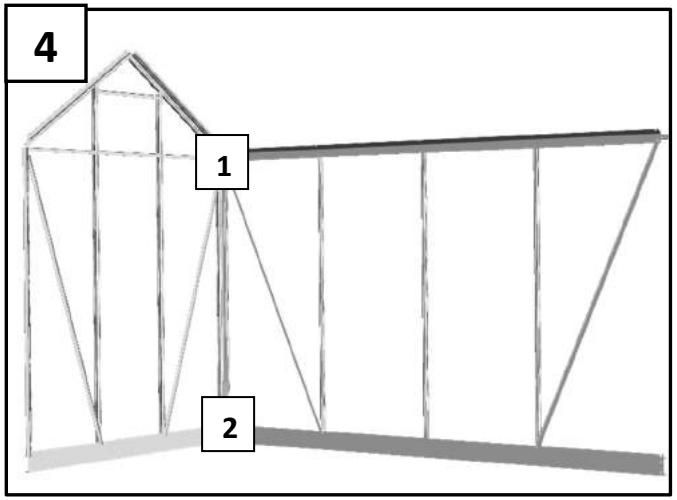
4
1
2

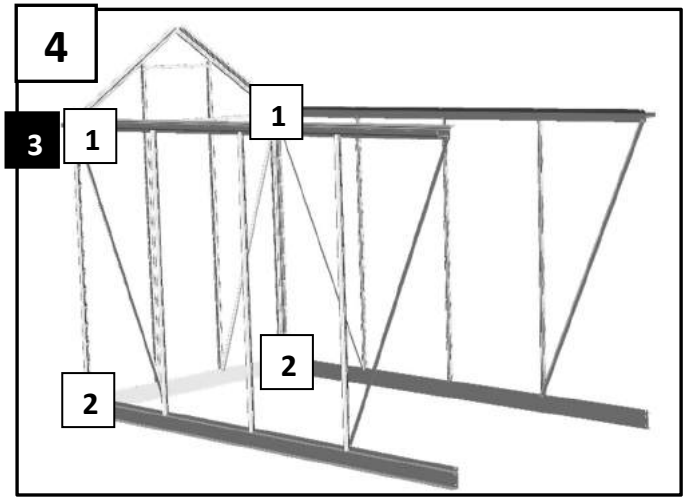
4
3
1
1
2
2

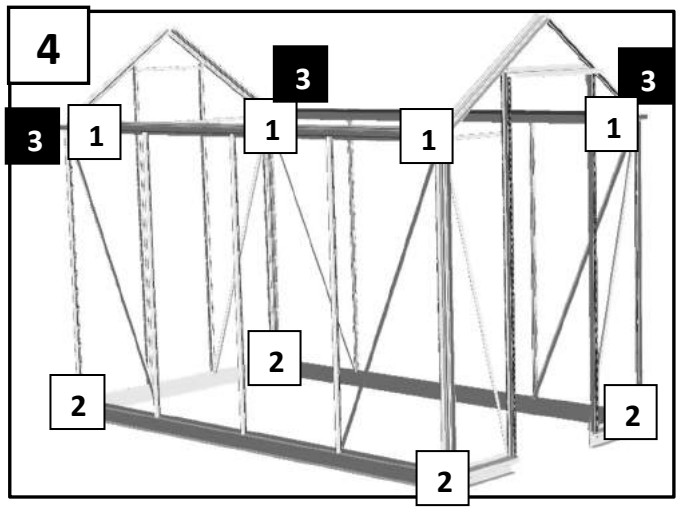
4
3
1
3
1
1
3
1
2
2
2

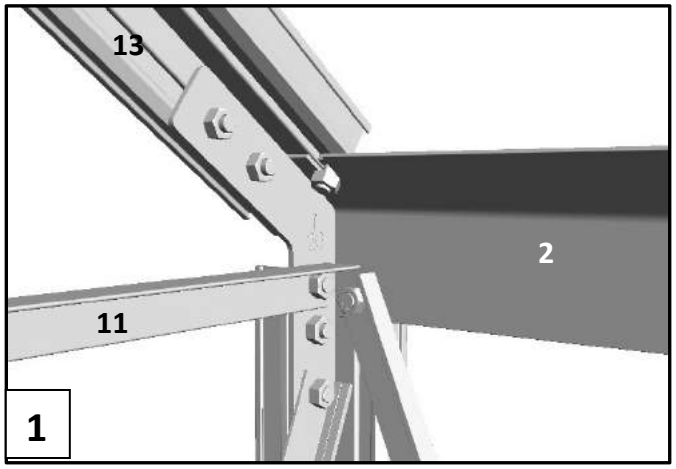
13
2
11
1

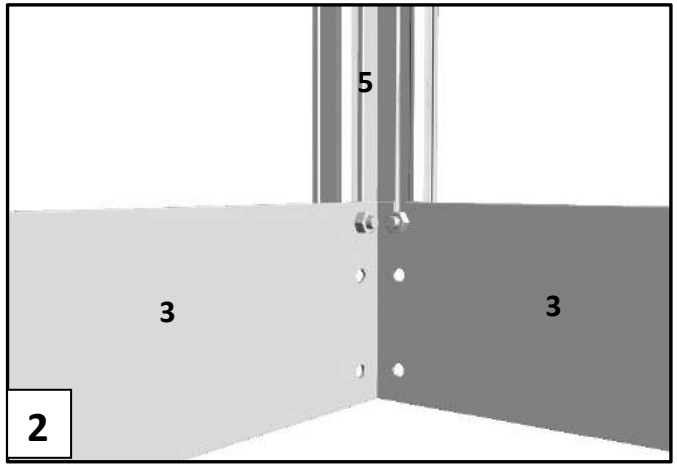
5
3
3
2

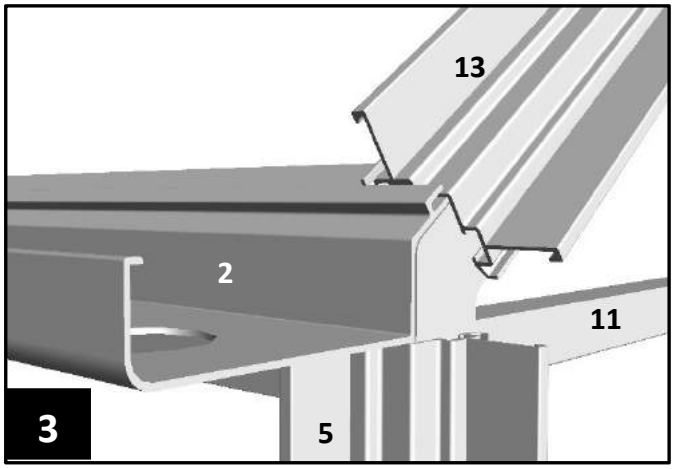
13
2
11
3
5

Tag - Roof - Dach - Tak - Toit - Dak - Tejado - Tetto - Katto

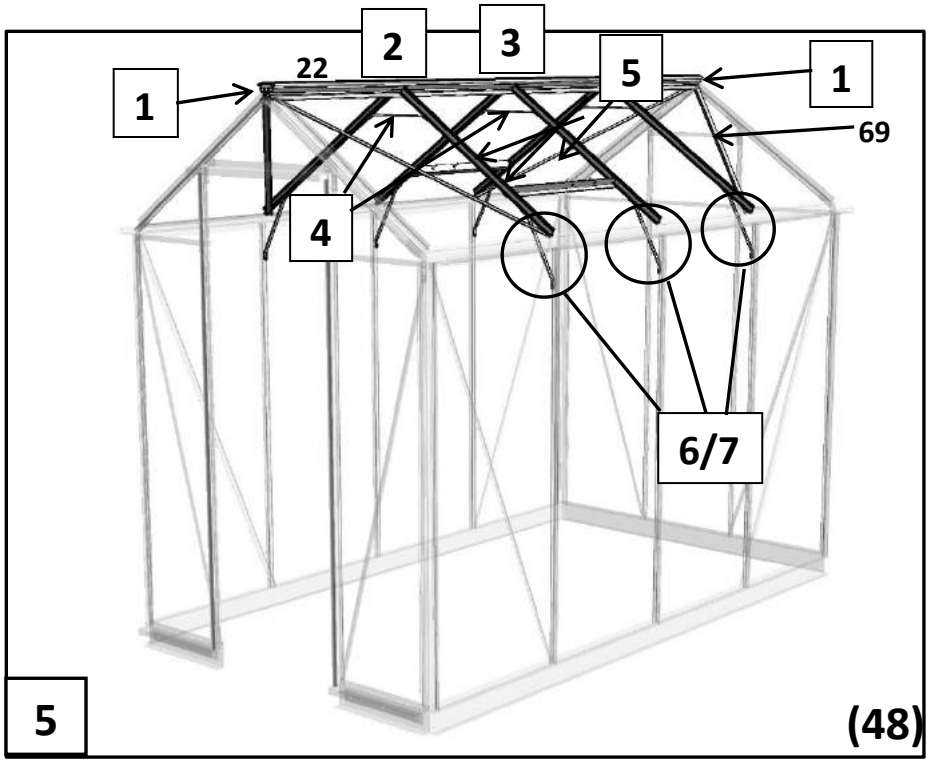

5	#	mm	44	46	48	ITEM NO.
	22	1264	1			RP2078401264
	22	1882		1		RP2078401882
	22	2500			1	RP2078402500
	23	832	2	4	6	RP228500832
	69	1034	2	4	4	RP2079111034
	27	638	1	2	2	RP046940638-27
	40	300	3	6	9	RP235570300

23	2a	2b
44	x 1	x 1
46	x 4	
48	x 4	x 2

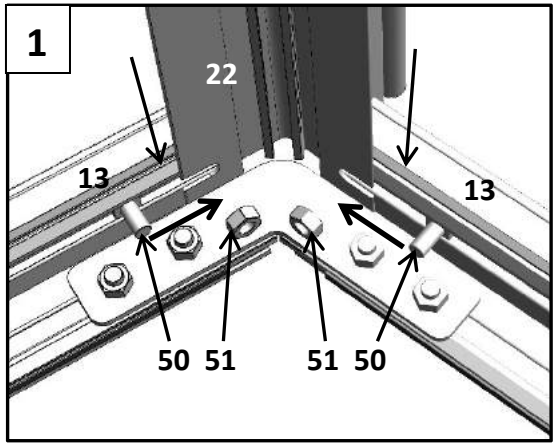

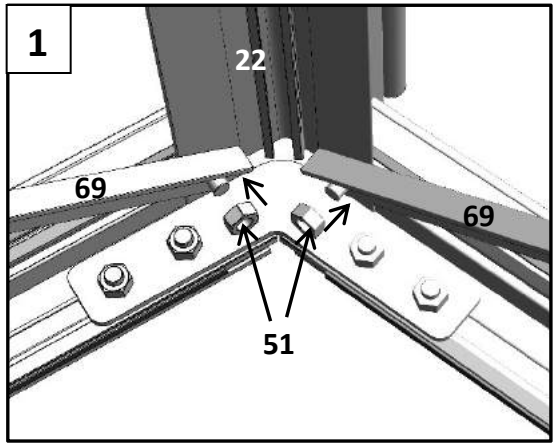

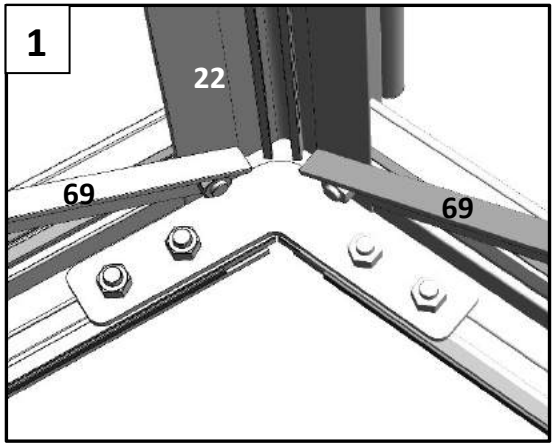

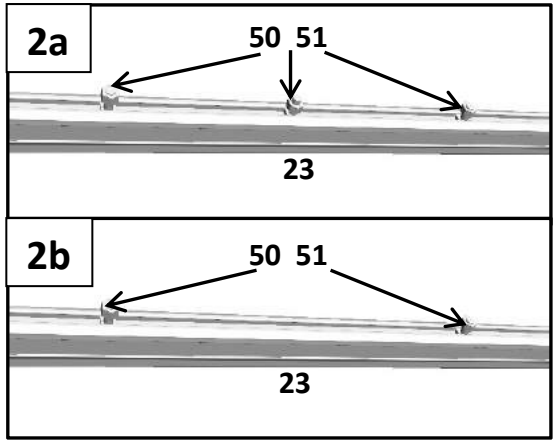

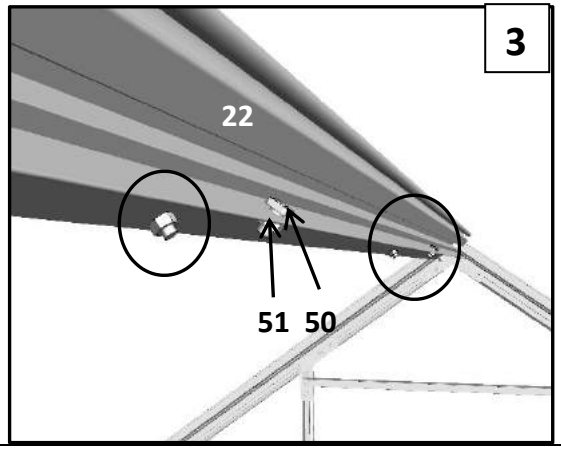

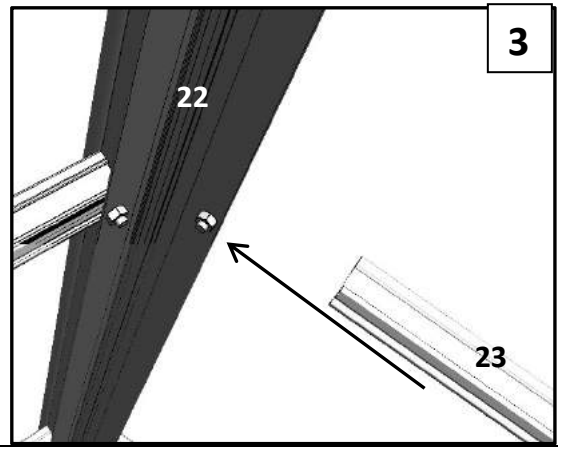

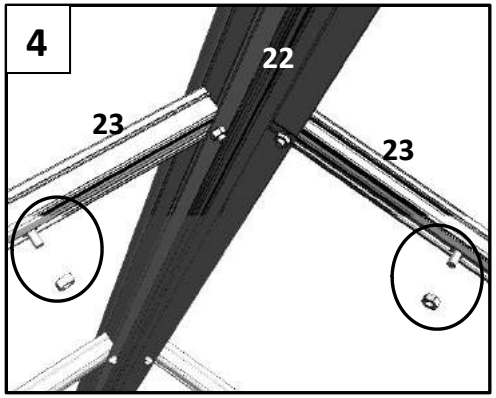
4
22
23
23

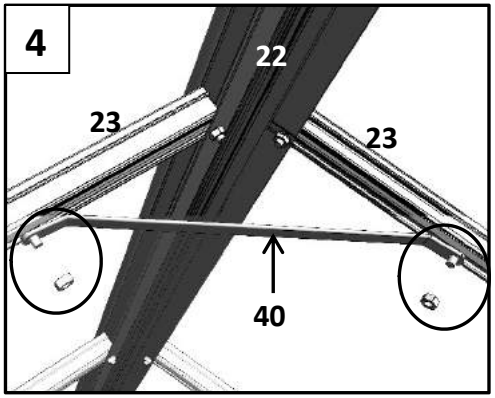
4
22
23
23
40

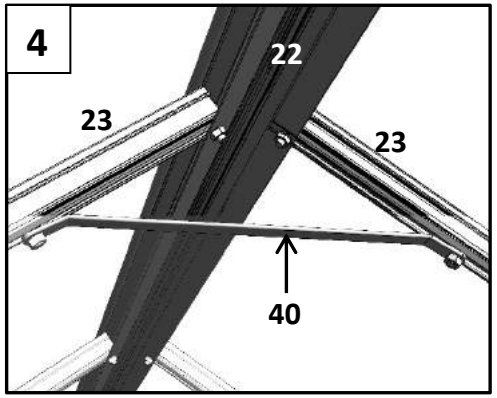
4
22
23
23
40

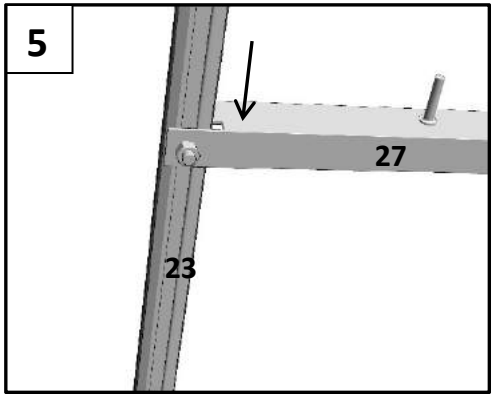
5
27
23

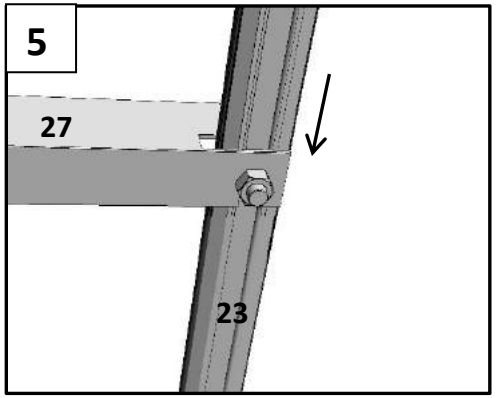
5
27
23

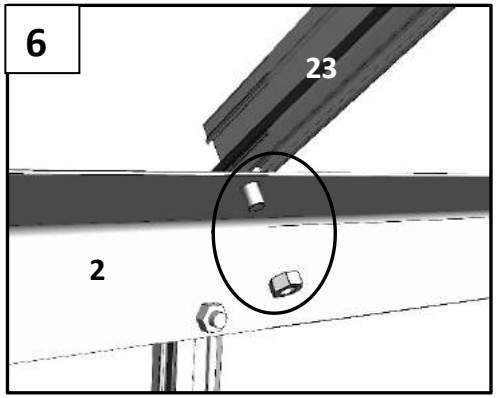
6
23
2

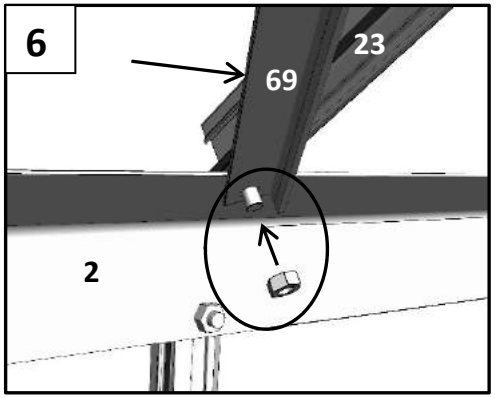
6
69
23
2

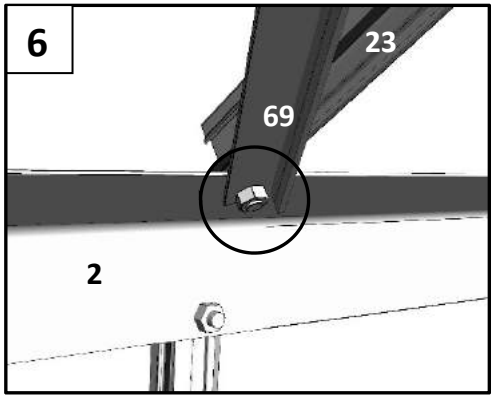
6
69
23
2

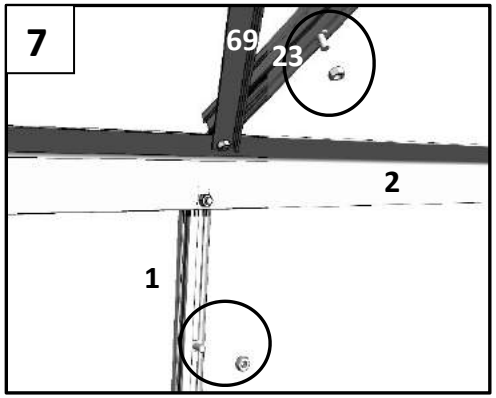
7
69
23
2
1

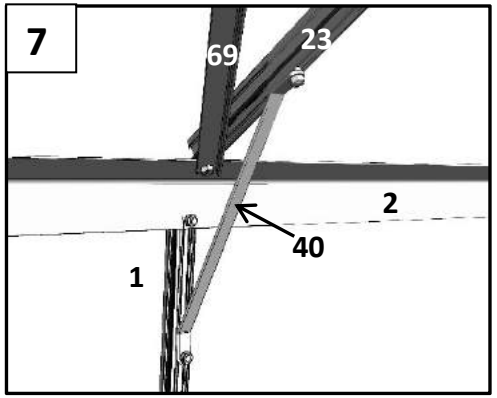
7
69
23
2
40
1

Windows - Vinduer - Fenster - Fönster - Fenêtres
Ramen - Ventanas - Finestre - Luukut

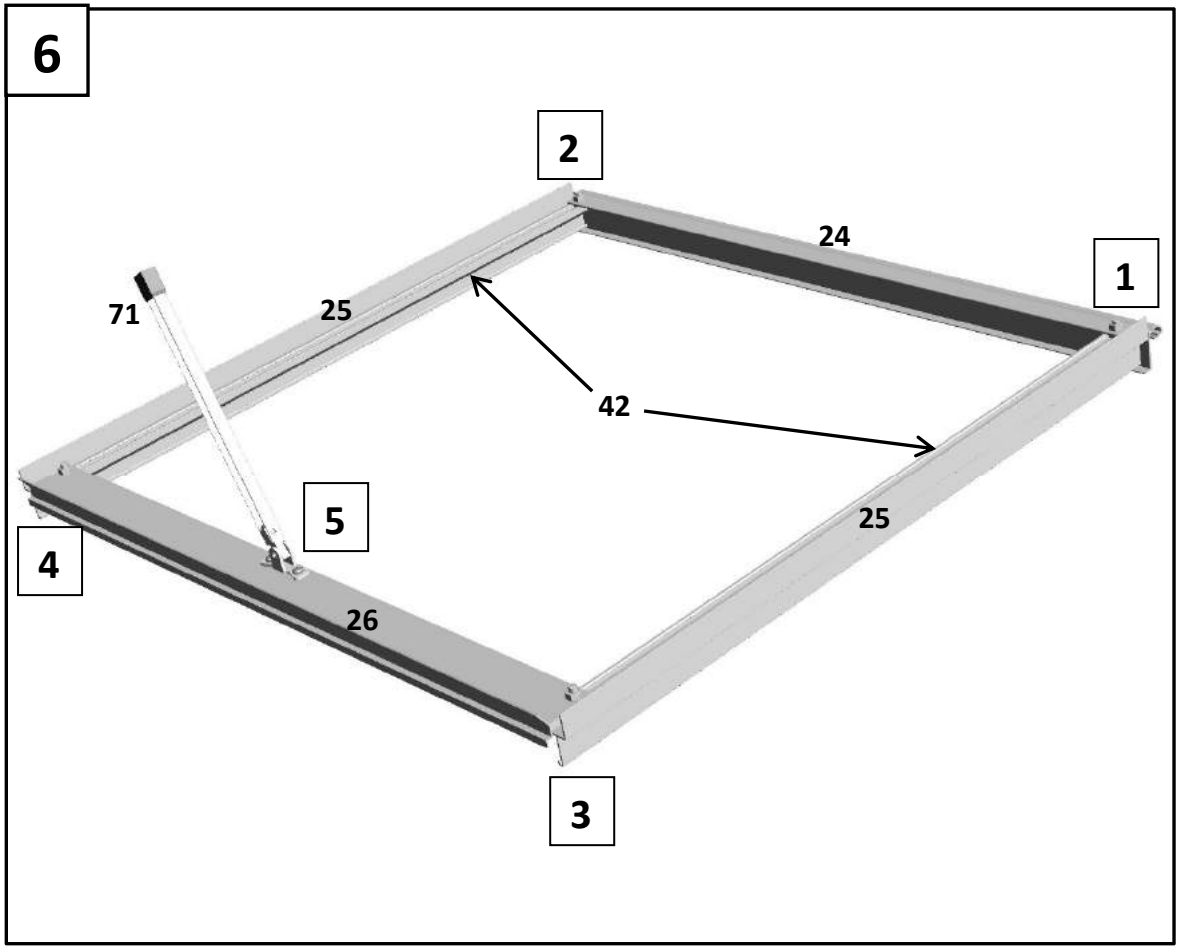

6	#	mm	44	46	48	ITEM NO.
	42	64000	1	1	1	RN00300413
	25	606	2	4	4	RP1070400606-25
	24	636	1	2	2	RP309300636
	26	610	1	2	2	RP088600610-26
	71	-	2	4	4	RN00300301
	71	-	1	2	2	RN00300301

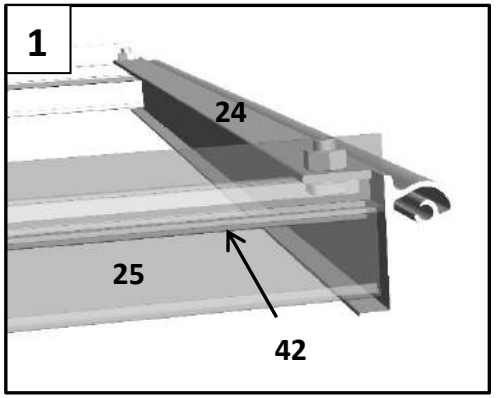

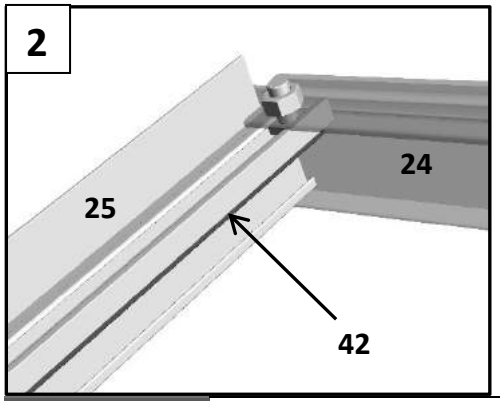

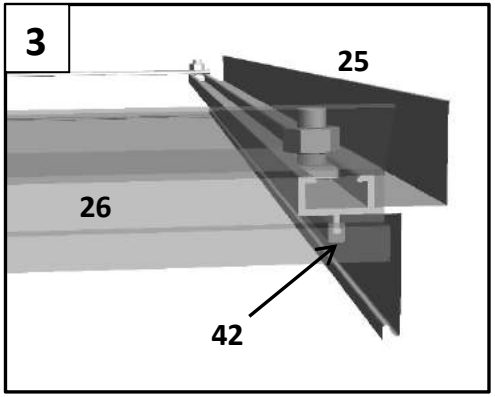

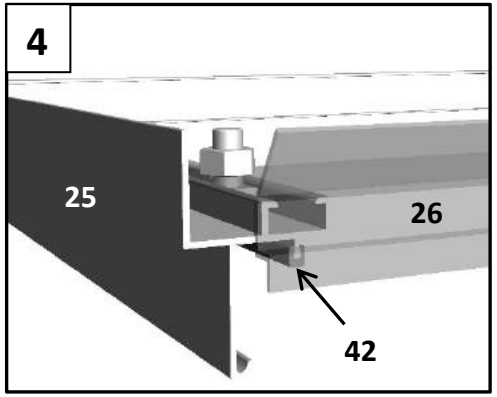

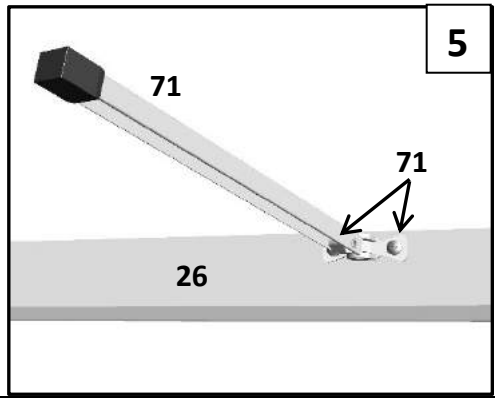

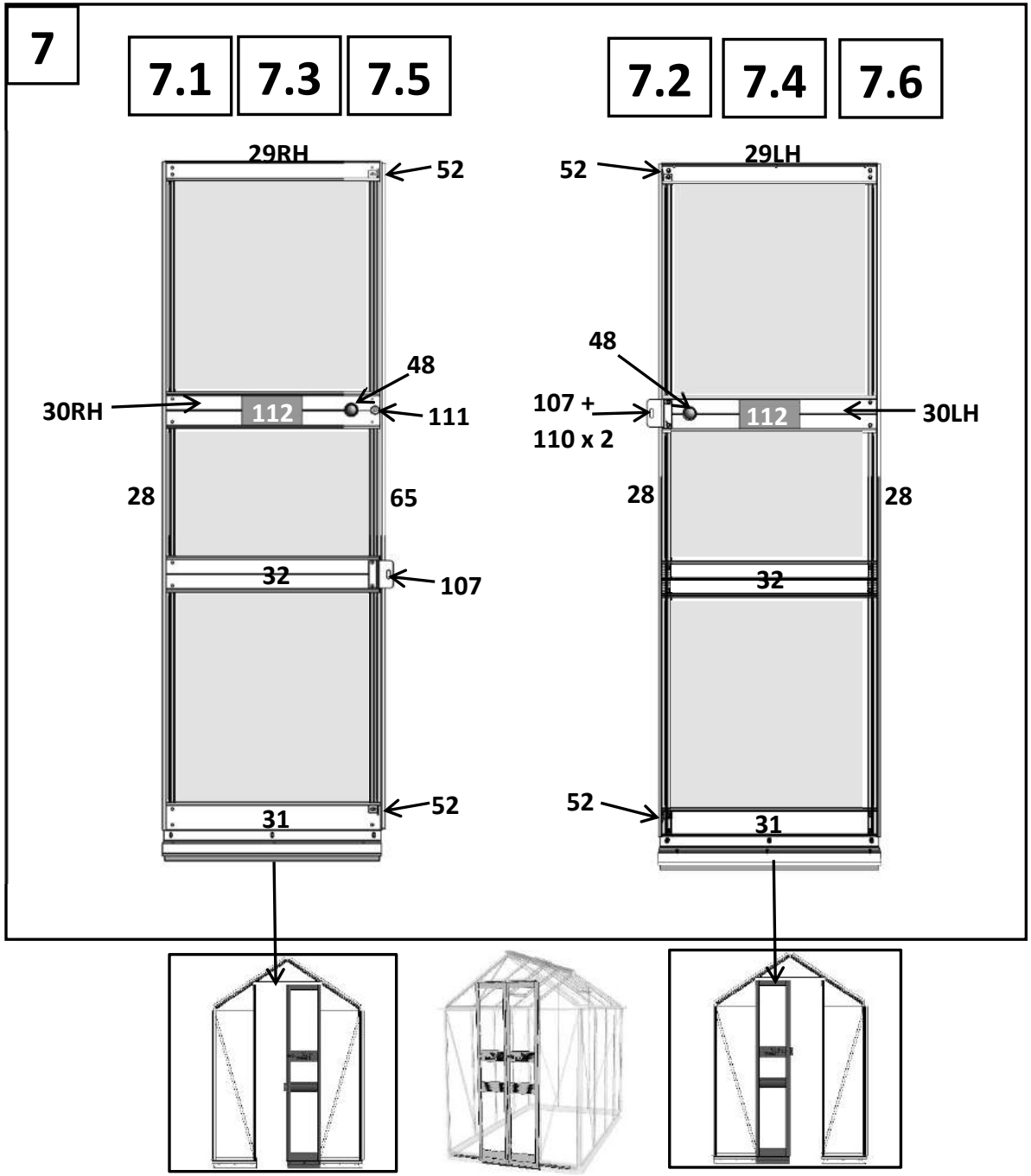

7	#	mm	44	46	48	ITEM NO.
	42	64000	2	2	2	RN00300413
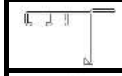	65	1738	1	1	1	RP209171738
	28	1738	3	3	3	RP158361738
	29RH 29LH	305	2	2	2	RP288960305-RH RP288960305-LH
	30RH 30LH	305	1 1	1 1	1 1	RP2081140305-RH RP2081140305-LH
	112	170	2	2	2	RN00310426
	32	305	2	2	2	RP2081140305
	31	315	2	2	2	RP309340315
	52	-	4	4	4	RN00310035
	107	-	2	2	2	RN00310421
	110	-	2	2	2	N00300606
	111	-	1	1	1	RN00310422
	111	-	1	1	1	RN00310422
	48	-	2	2	2	RN00300227BK

Door - Dør - Tür - Porte - Deur - Puerta - Porta - Ovi

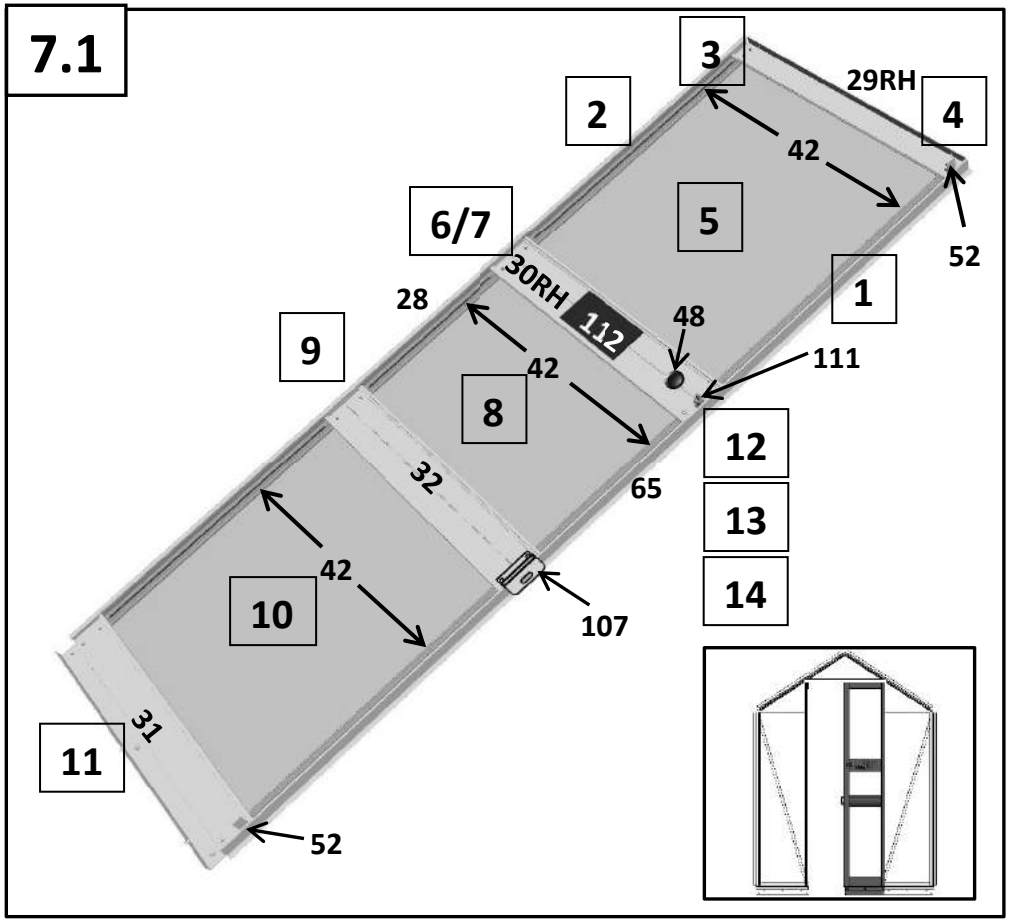

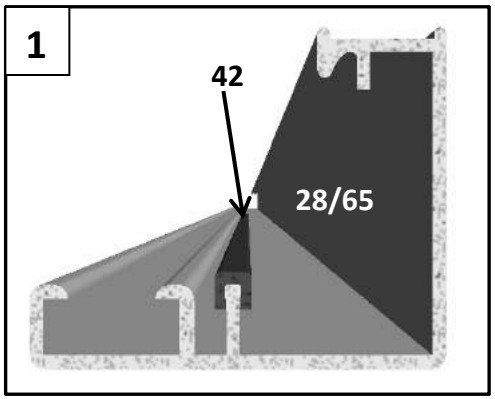

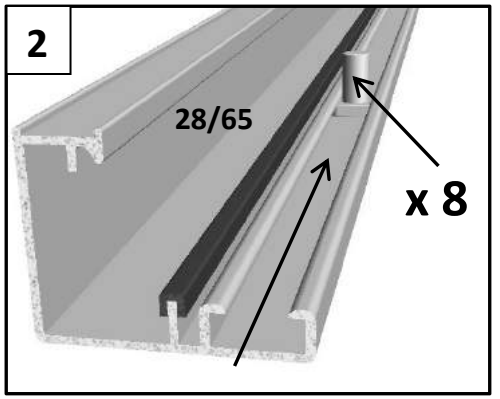

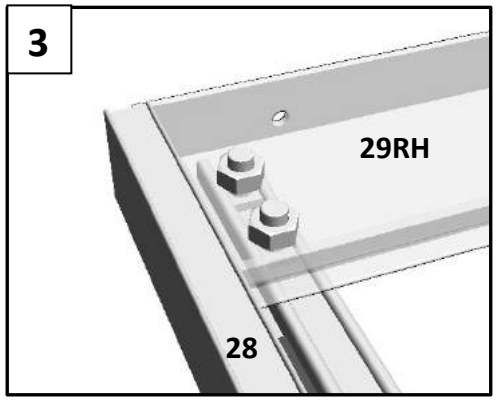

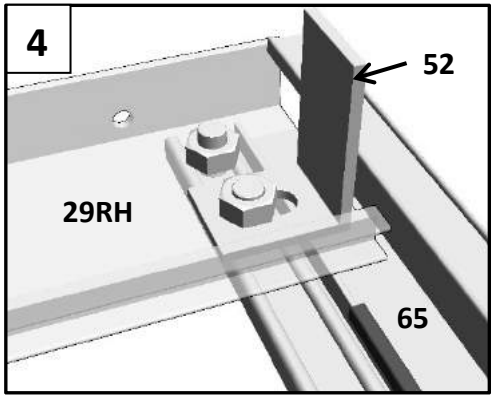

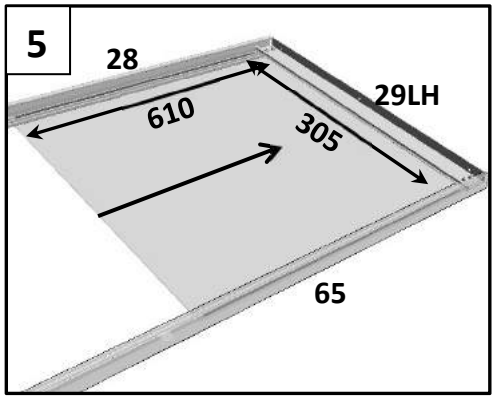

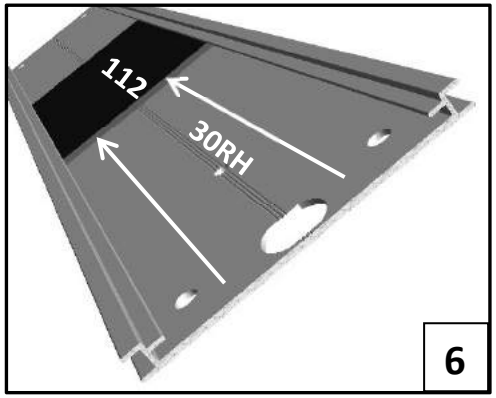

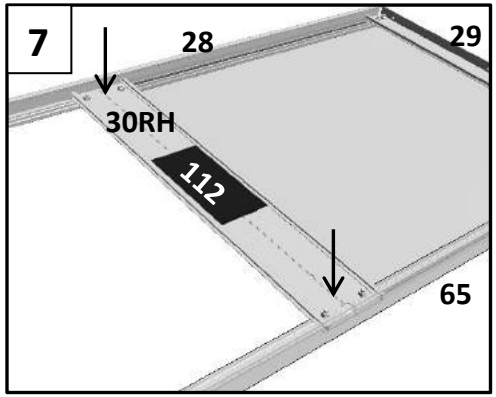

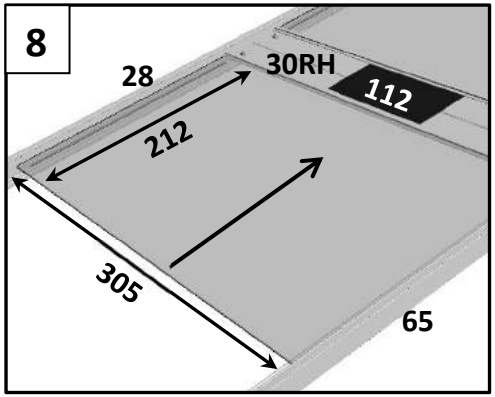

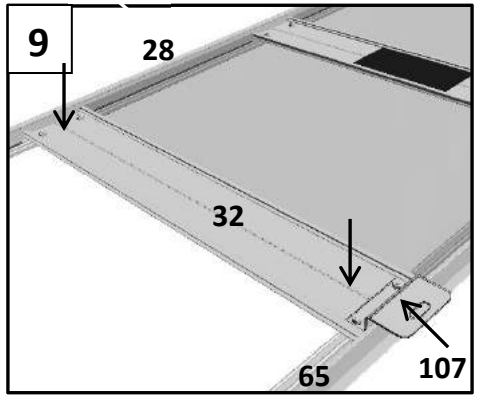
9
28
32
65
107

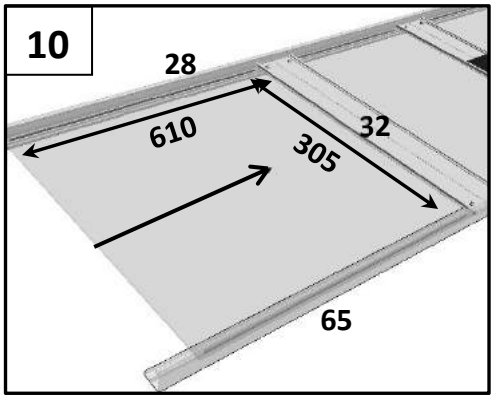
10
28
610
305
32
65

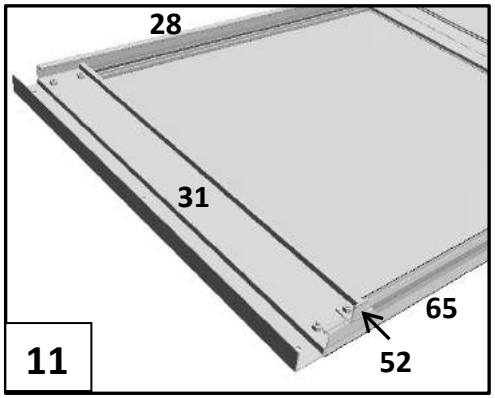
28
31
65
52
11

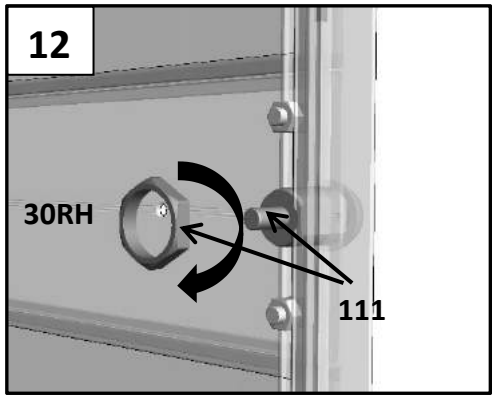
12
30RH
111

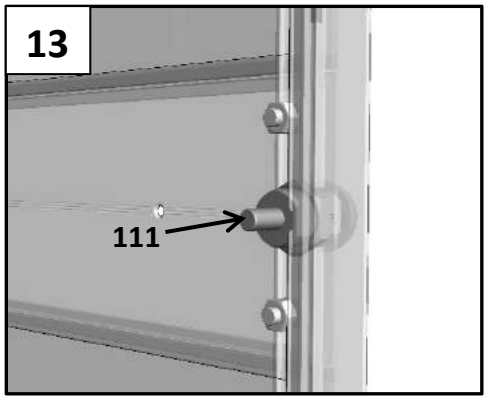
13
111

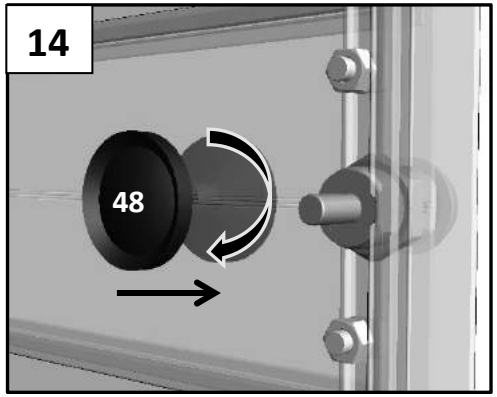
14
48

Door - Dør - Tür - Porte - Deur - Puerta - Porta - Ovi

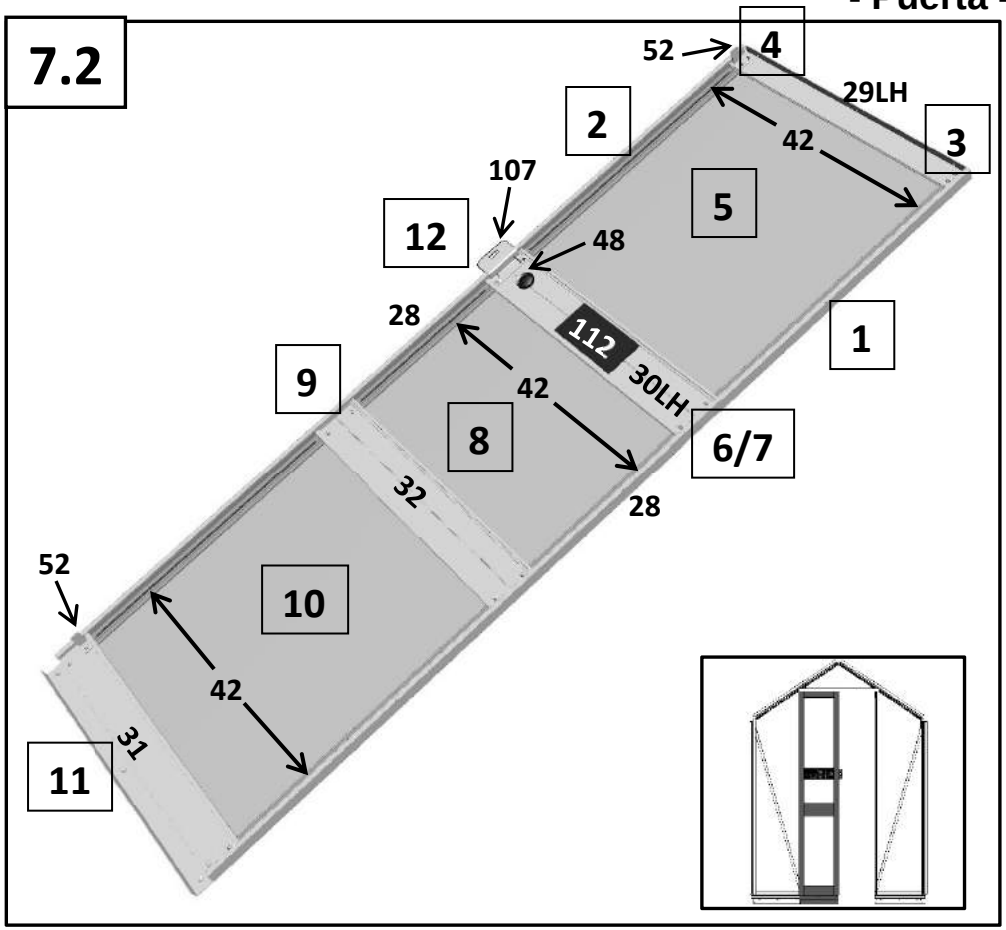

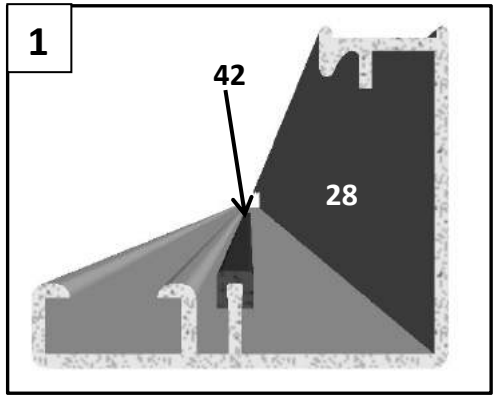

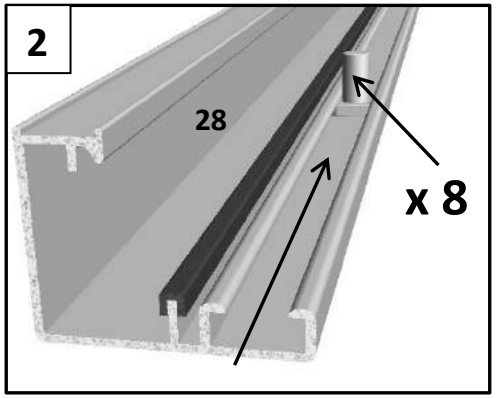

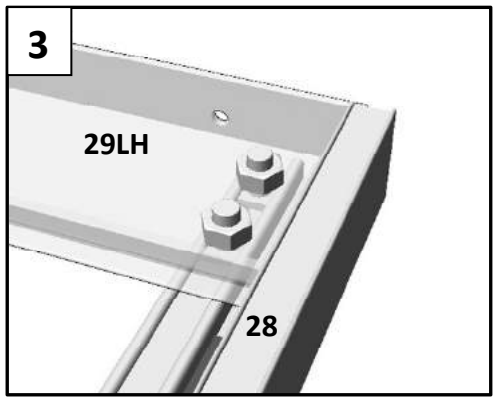

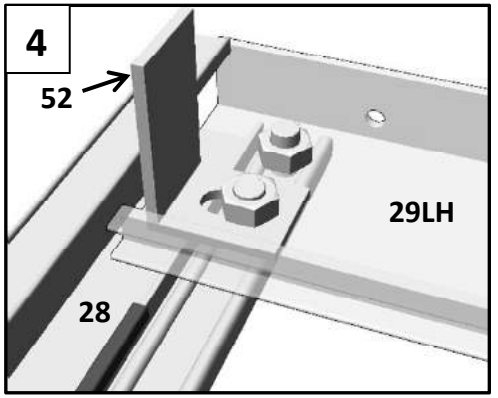

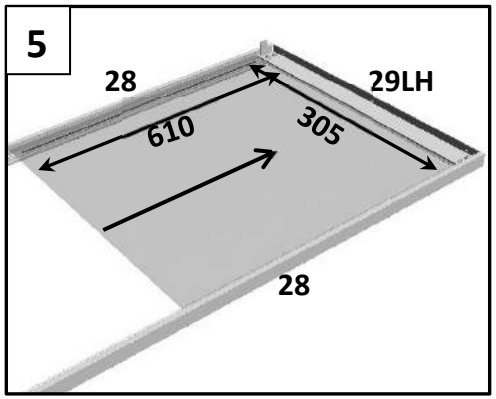

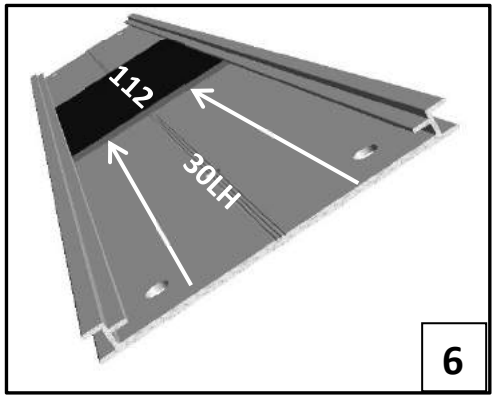

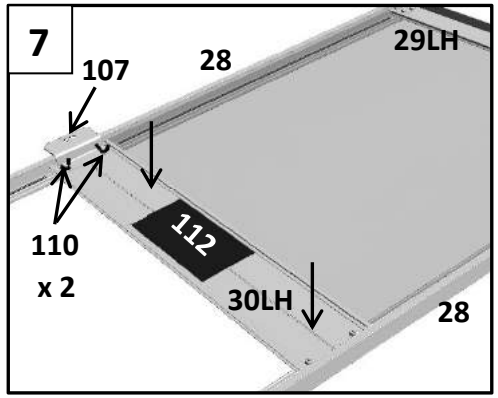

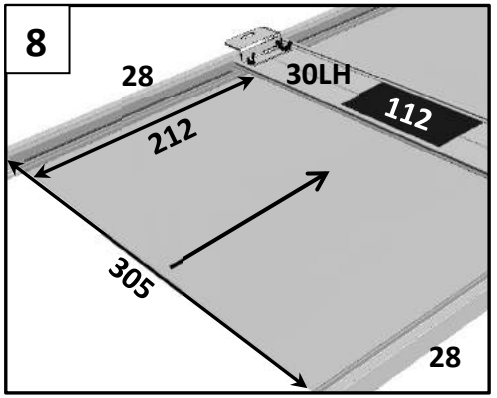

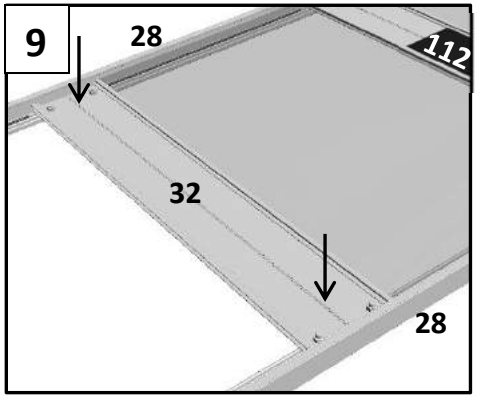
9
28
112
32
28

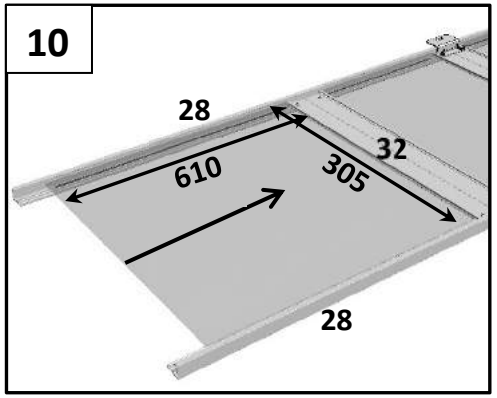
10
28
610
305
32
28

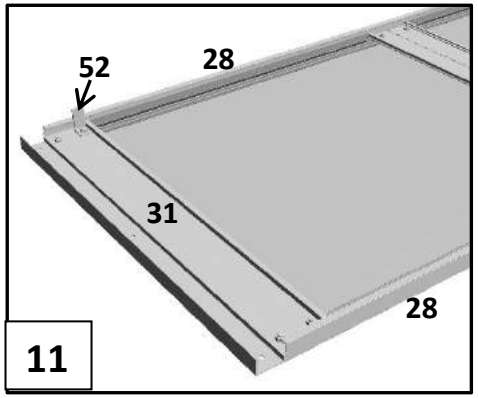
52
28
31
28
11

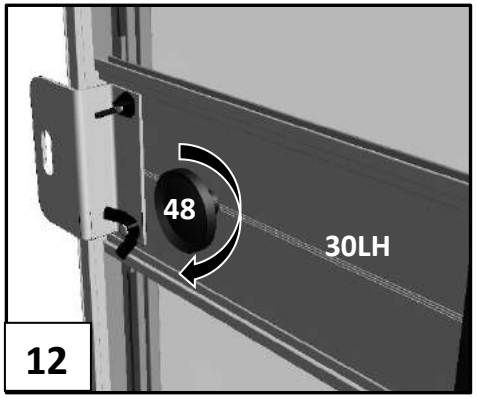
48
30LH
12

Door - Dør - Tür - Porte - Deur - Puerta - Porta - Ovi

7.3

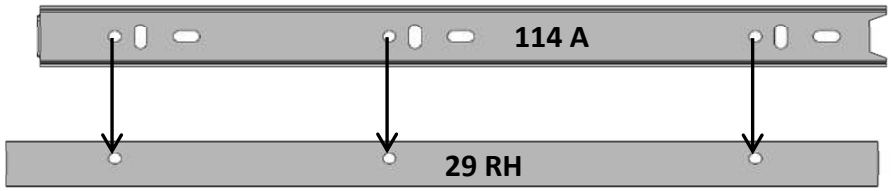

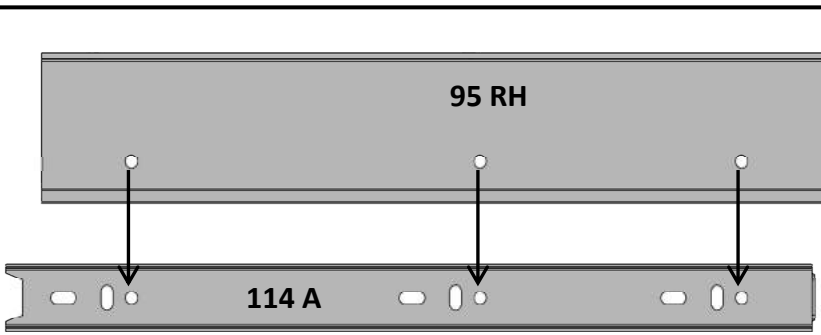

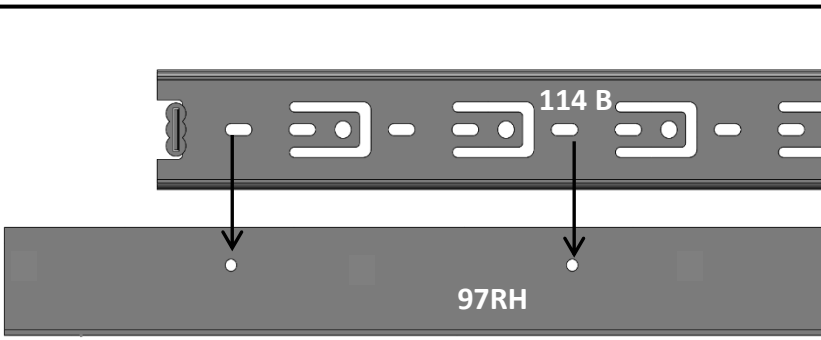

7.4

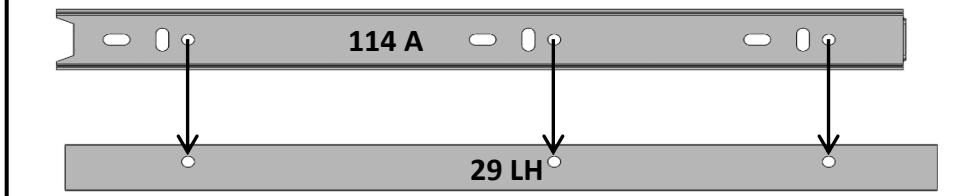

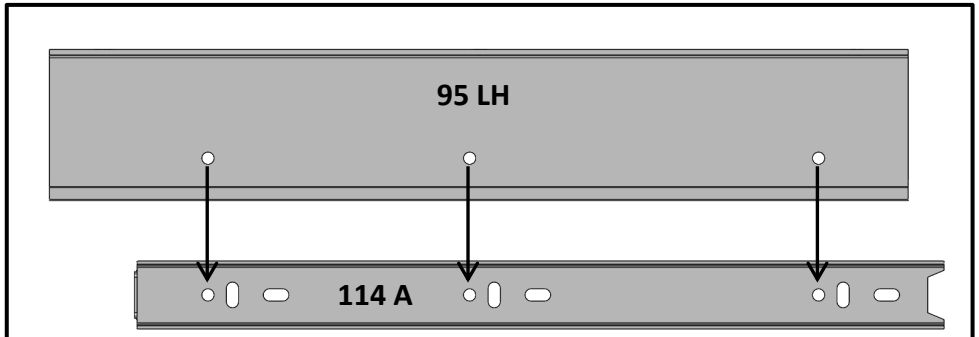

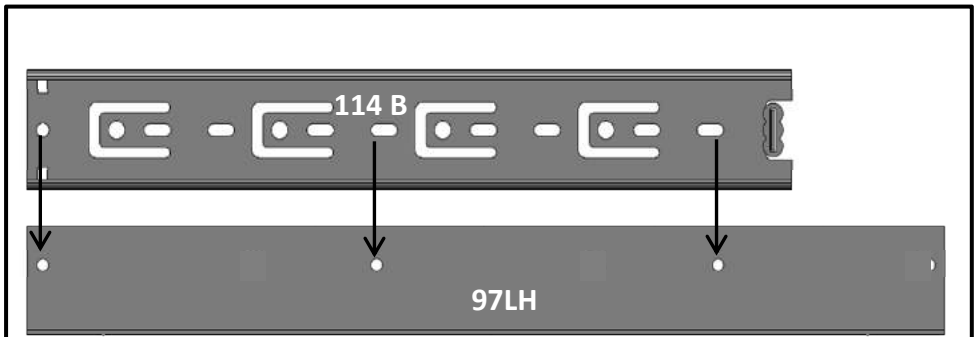

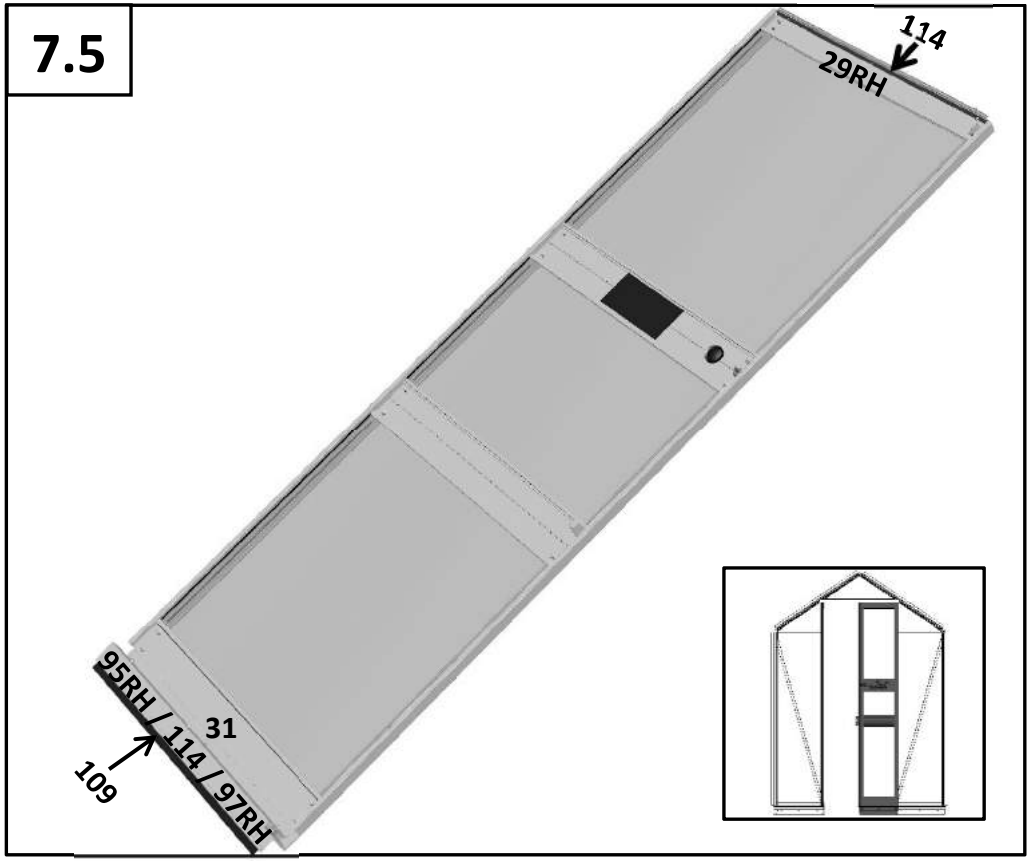

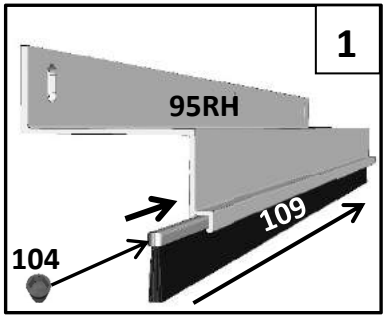

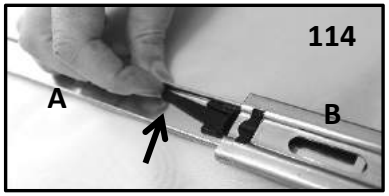

7.5	#	mm	44	46	48	ITEM NO.
	109 104	610 -	1 2	1 2	1 2	RN00310420 N00300604
	95RH	315	1	1	1	RP2079100315RH
	114 A/B	600	2	2	2	RN00310437
	97RH	360	1	1	1	RP2079120360-RH
	103 118	-	26	26	26	N00300603 01645
	102	-	26	26	26	N00300602

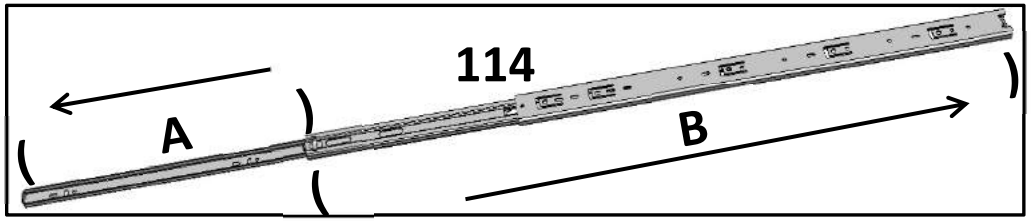

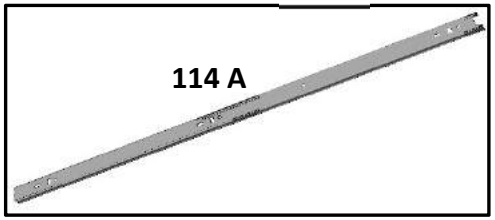

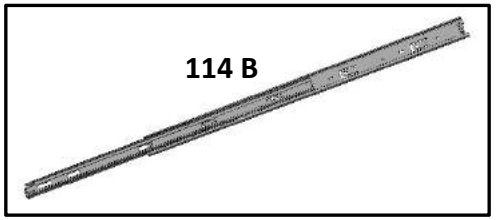

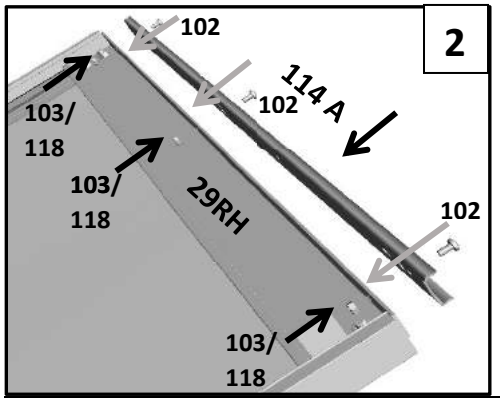

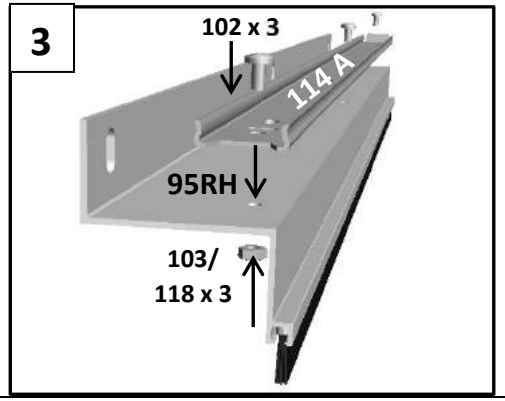

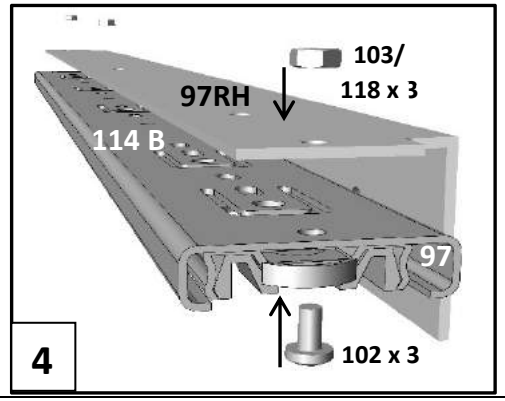

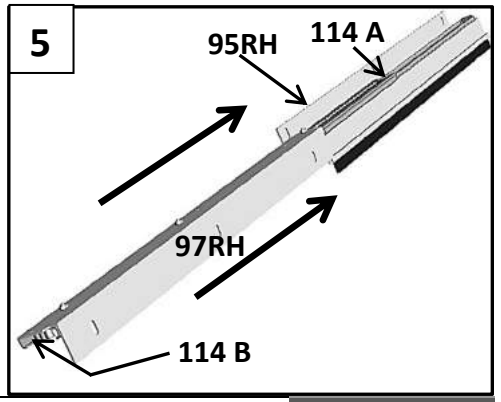

Door - Dør - Tür - Porte - Deur - Puerta - Porta - Ovi

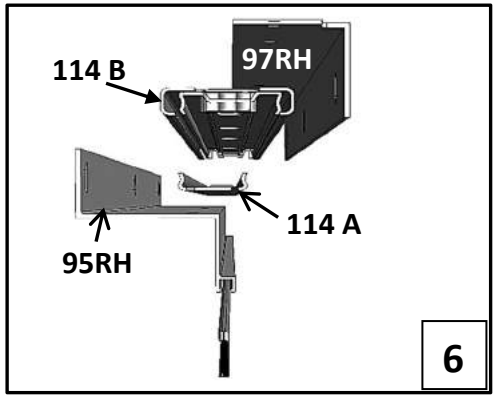

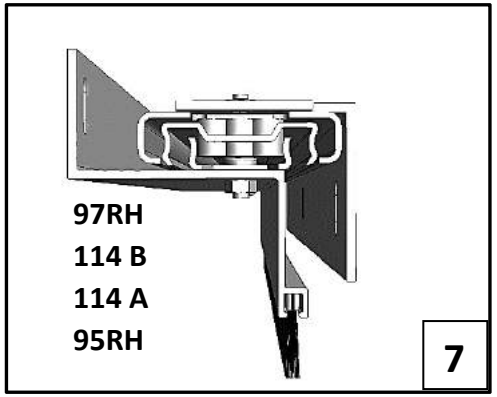

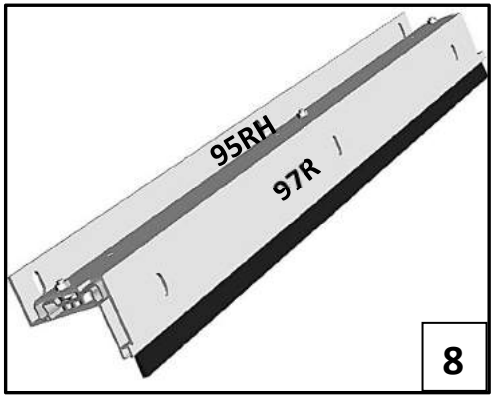

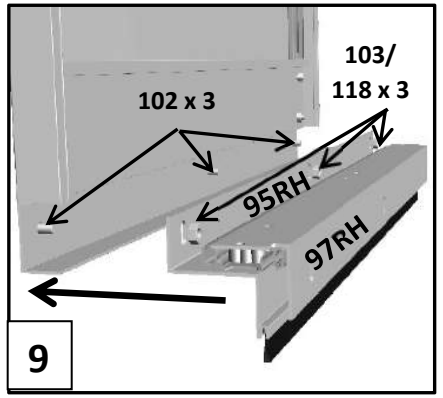

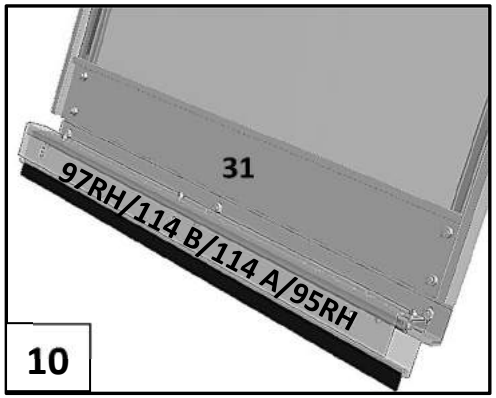

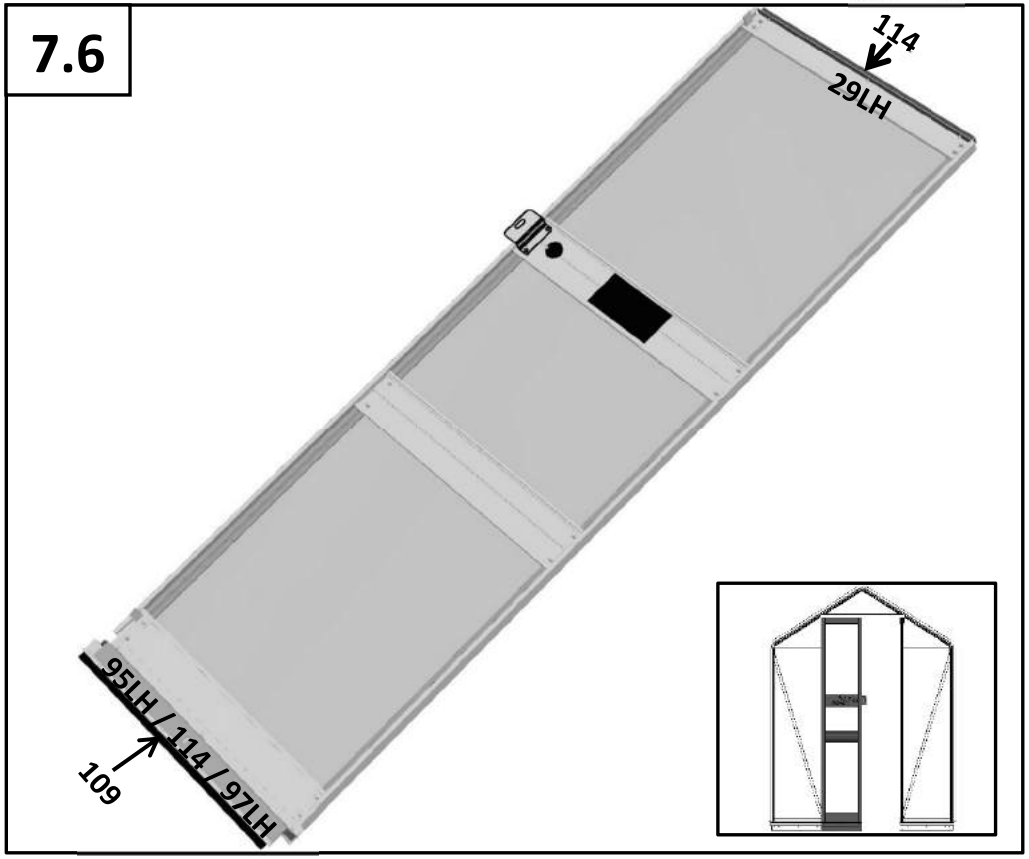

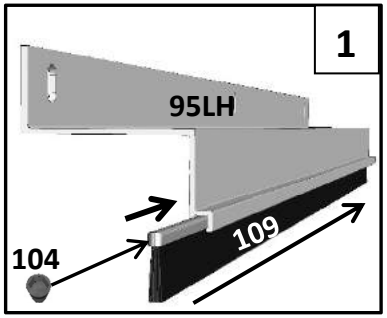

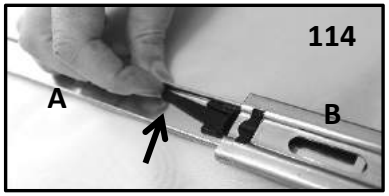

7.6	#	mm	44	46	48	ITEM NO.
	109 104	610 -	1 2	1 2	1 2	RN00310420 N00300604
	95LH	315	1	1	1	RP2079100315-LH
	114 A/B	600	2	2	2	RN00310437
	97LH	360	1	1	1	RP2079120360-LH
	103 118	-	26	26	26	N00300603 01645
	102	-	26	26	26	N00300602

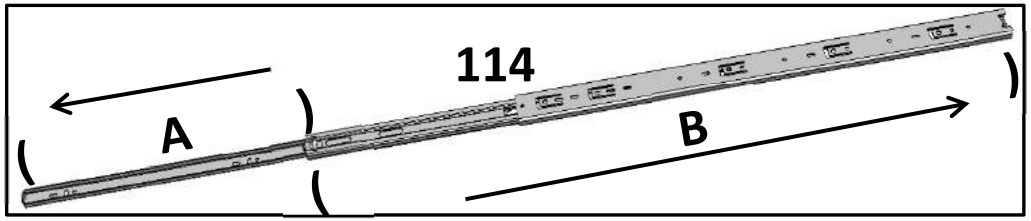

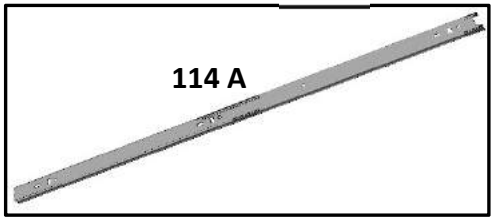

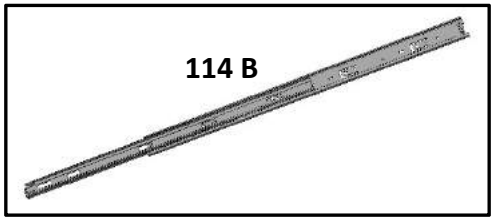

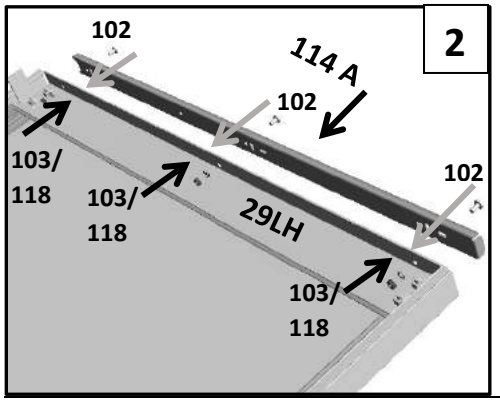

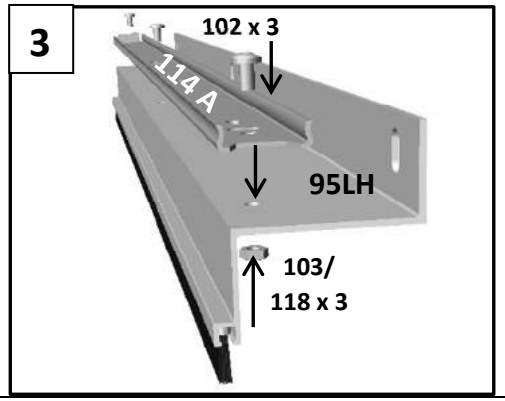

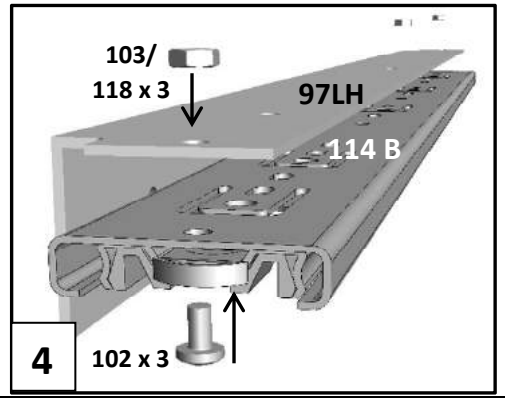

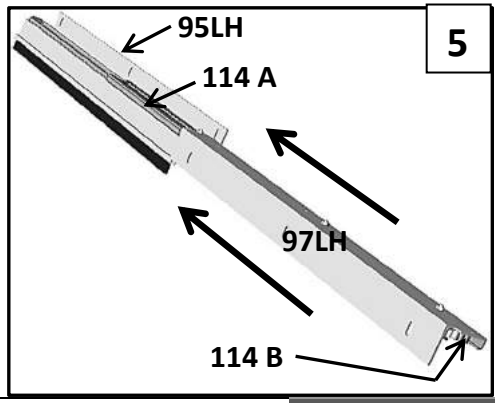

Door - Dør - Tür - Porte - Deur - Puerta - Porta - Ovi

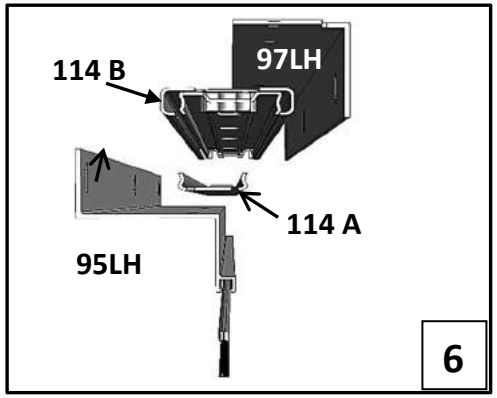

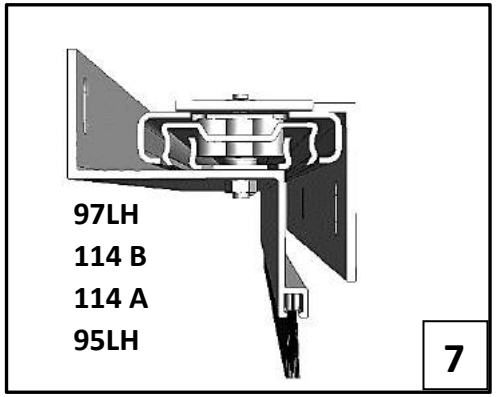

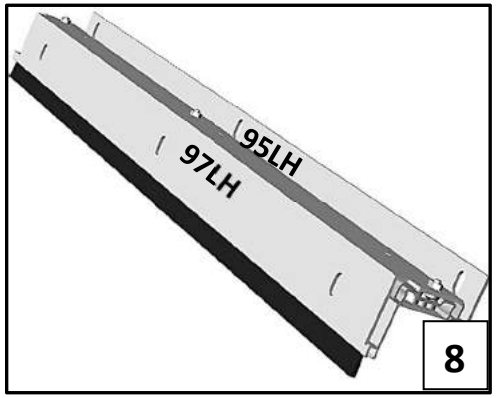

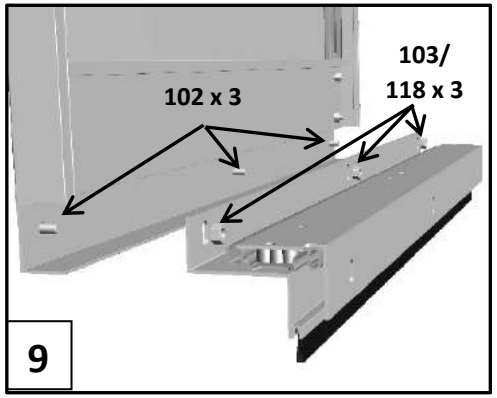

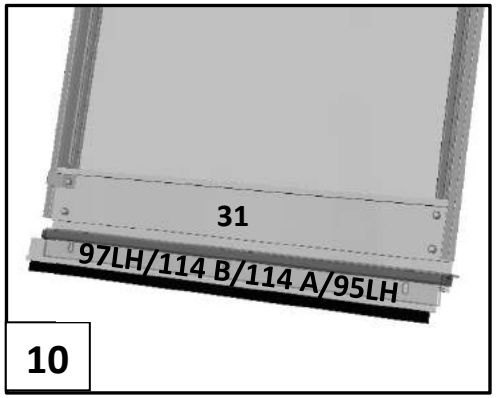

www.edengreenhouses.com

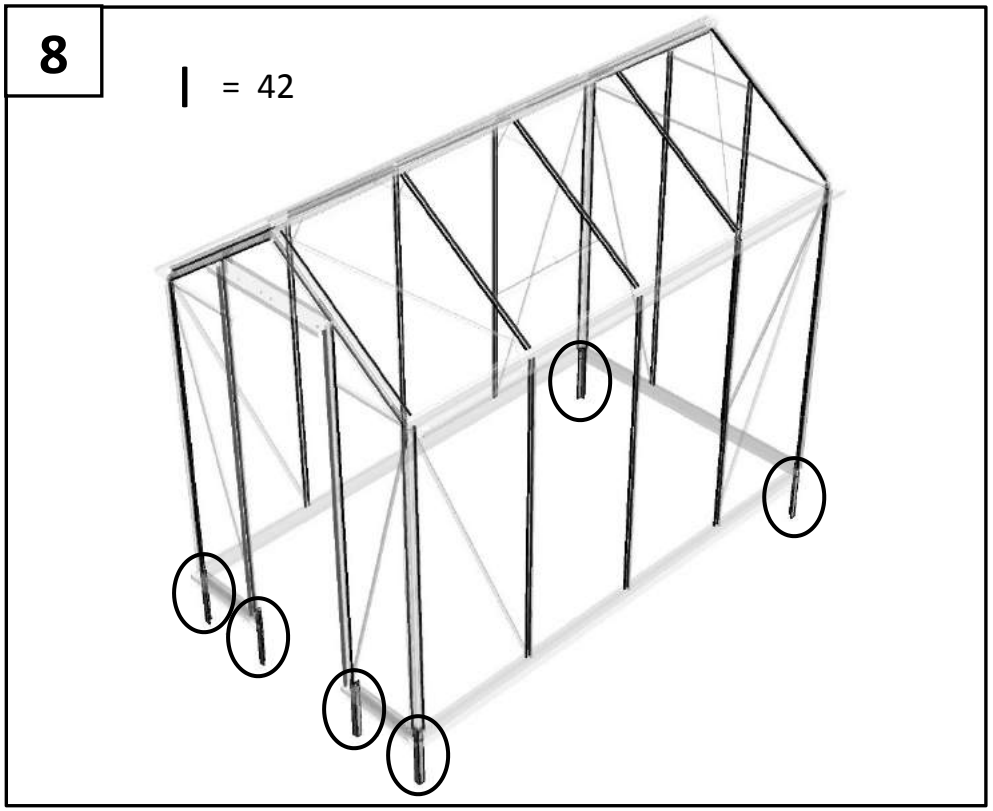

8	#	mm		ITEM NO.
	64	305	6	RP102640305
	98	-	6	N00310020
	42	64000	1	RN00300413

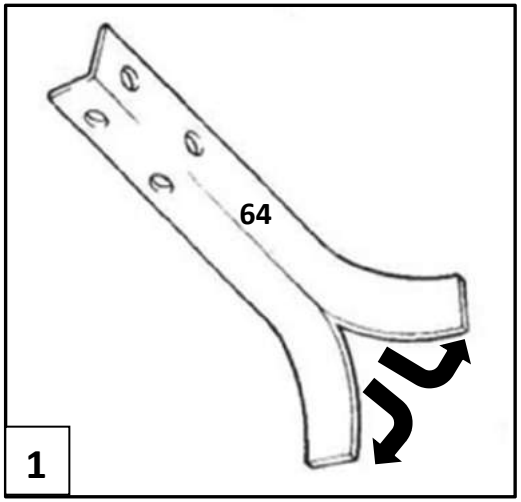

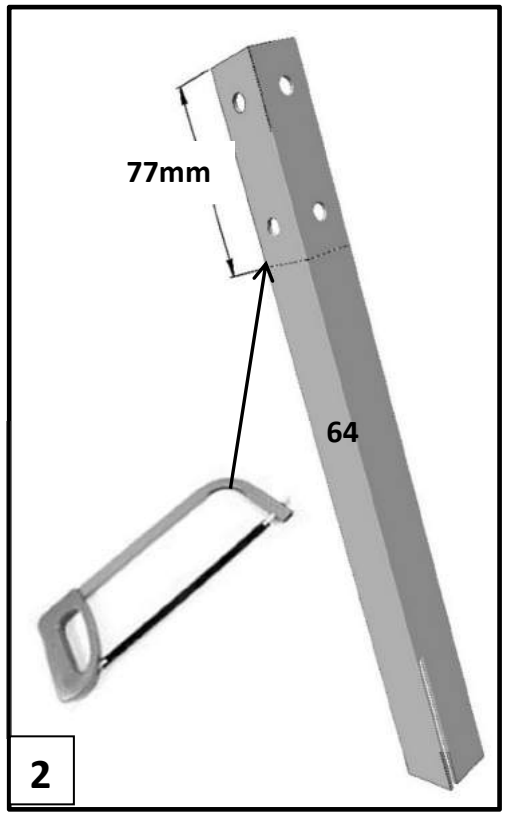

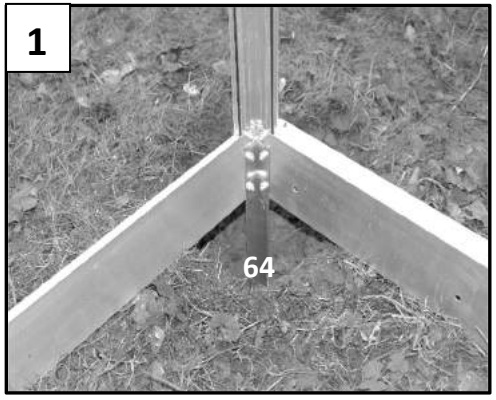

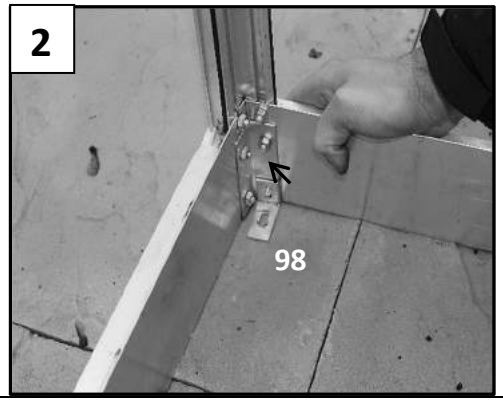

Locating

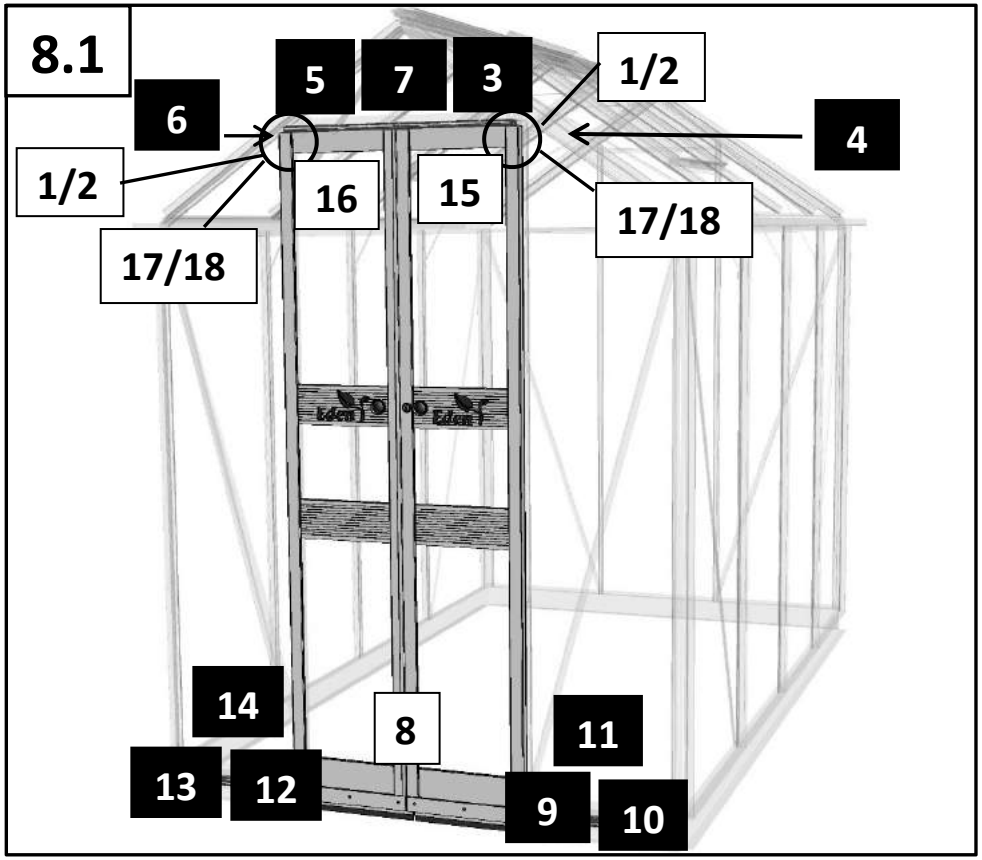
8.1
5
7
3
1/2
6
4
1/2
16
15
17/18
17/18
14
8
11
13
12
9
10

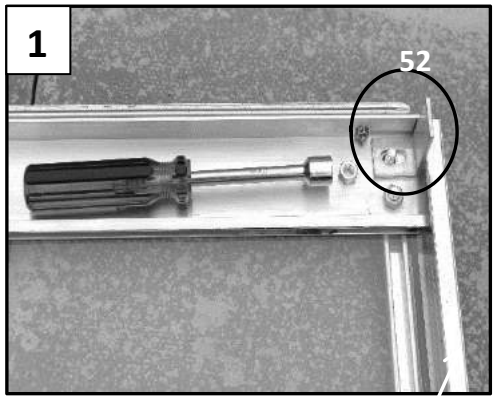
1
52

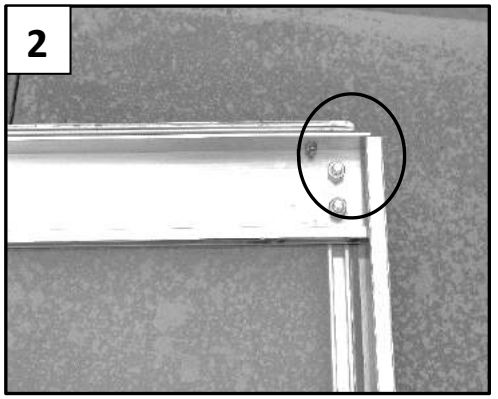
2

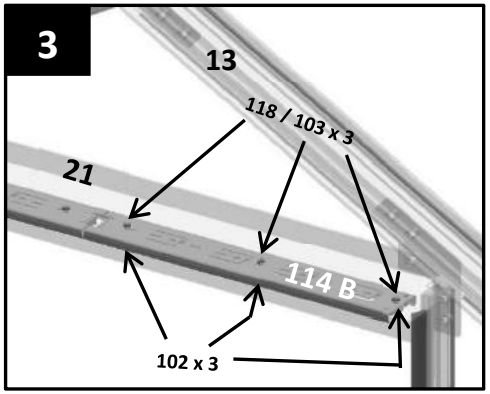
3
13
118 / 103 x 3
21
114 B
102 x 3

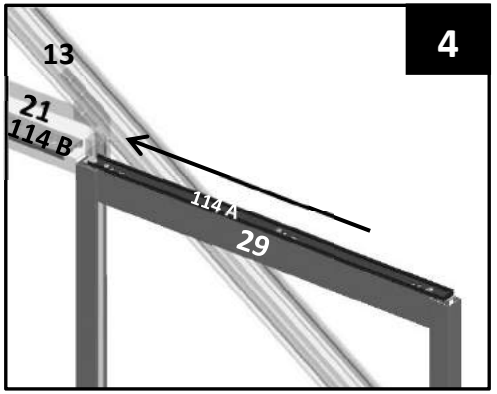
13
21
114 B
4
114 A
29

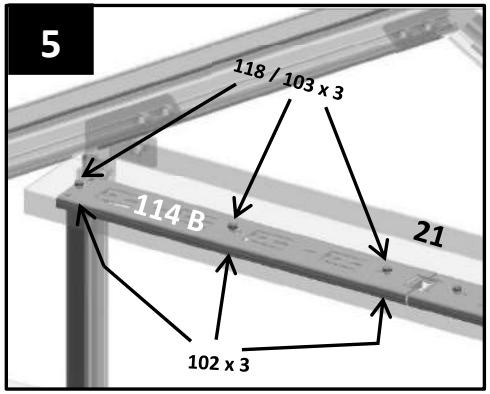
5
118 / 103 x 3
114 B
21
102 x 3

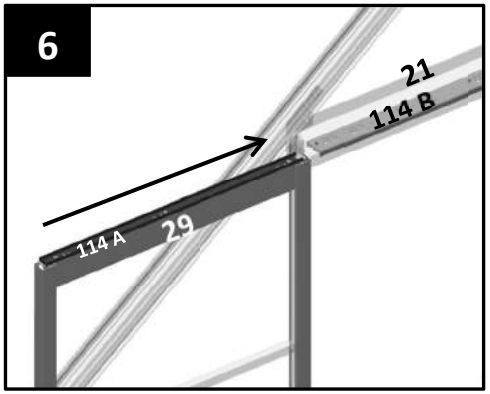
6
21
114 B
114 A
29

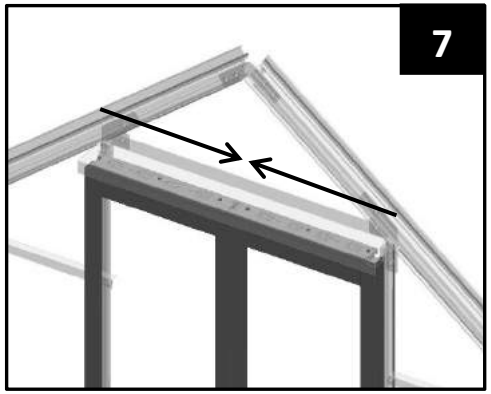
7

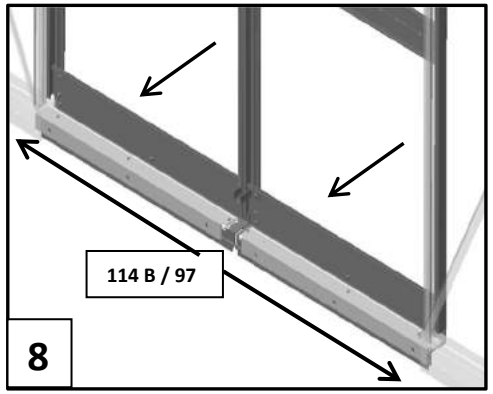
114 B / 97
8

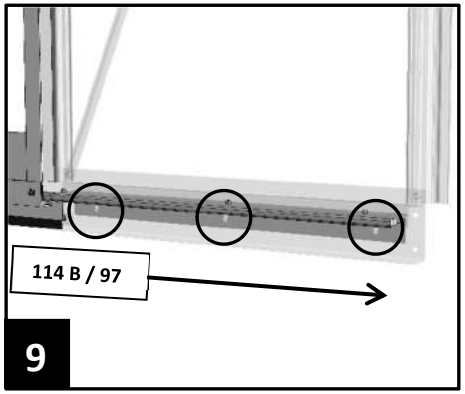
114 B / 97
9

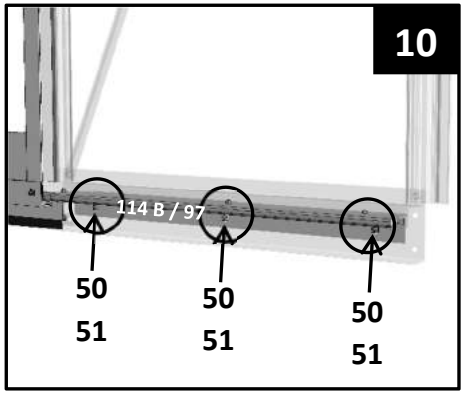
10
114 B / 97
50
51
50
51
50
51

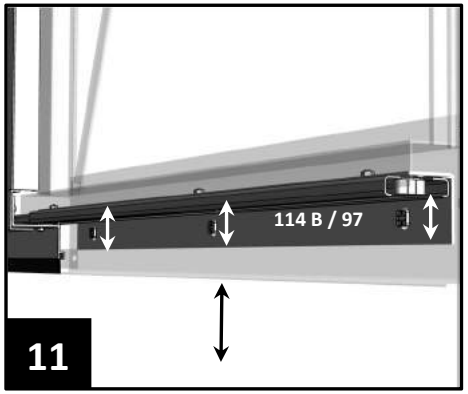
114 B / 97
11

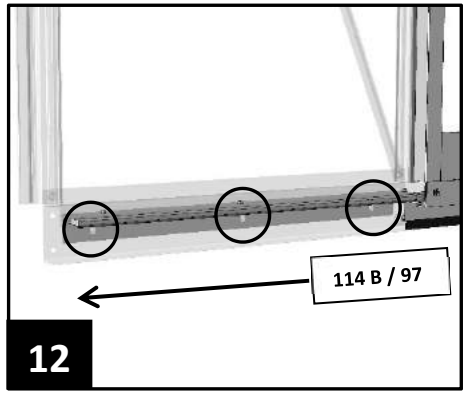
114 B / 97
12

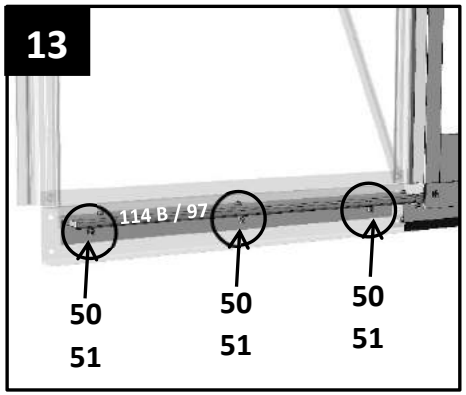
13
114 B / 97
50
51
50
51
50
51

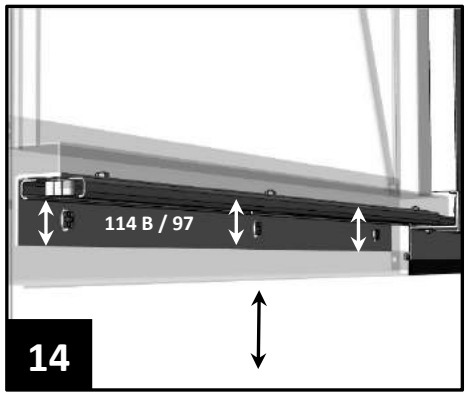
114 B / 97
14

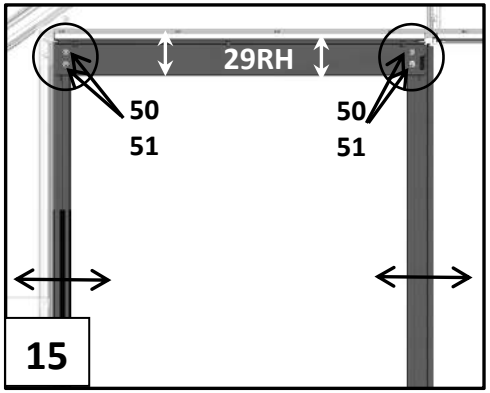
29RH
50
51
50
51
15

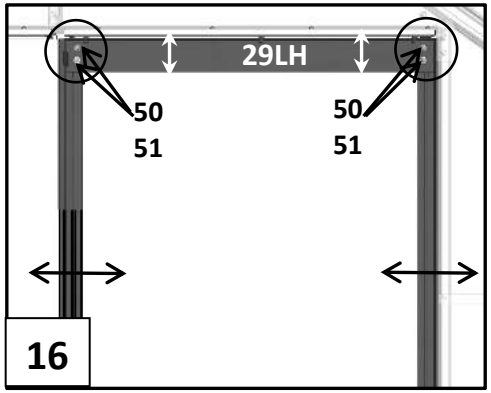
29LH
50
51
50
51
16

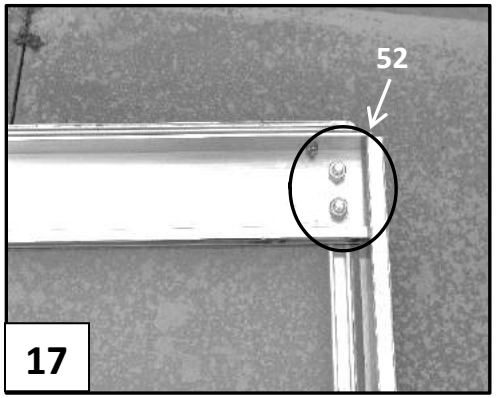
52
17

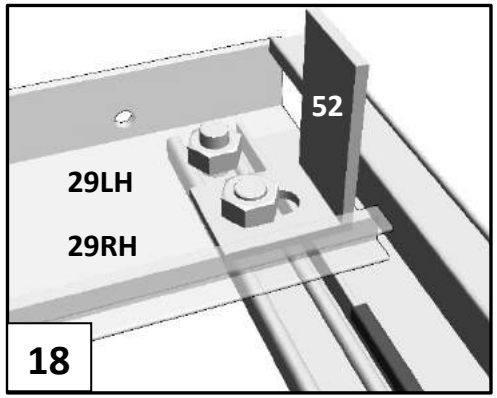
52
29LH
29RH
18

Louvre

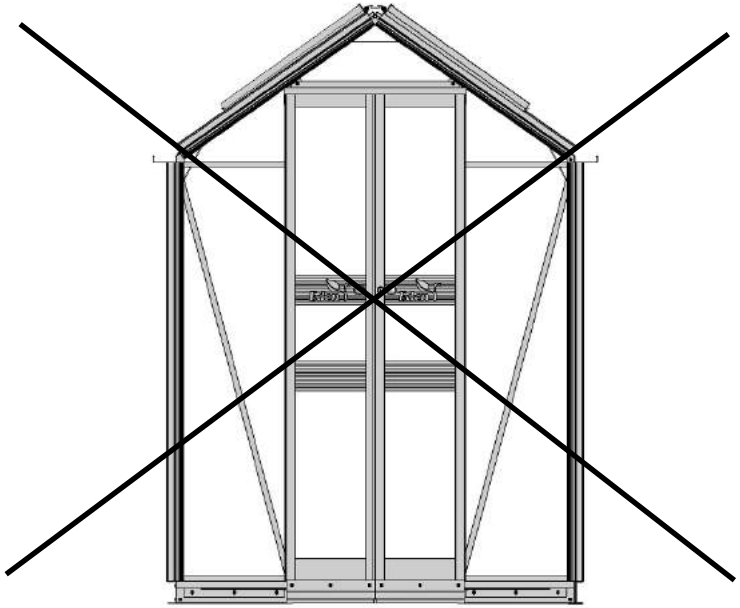

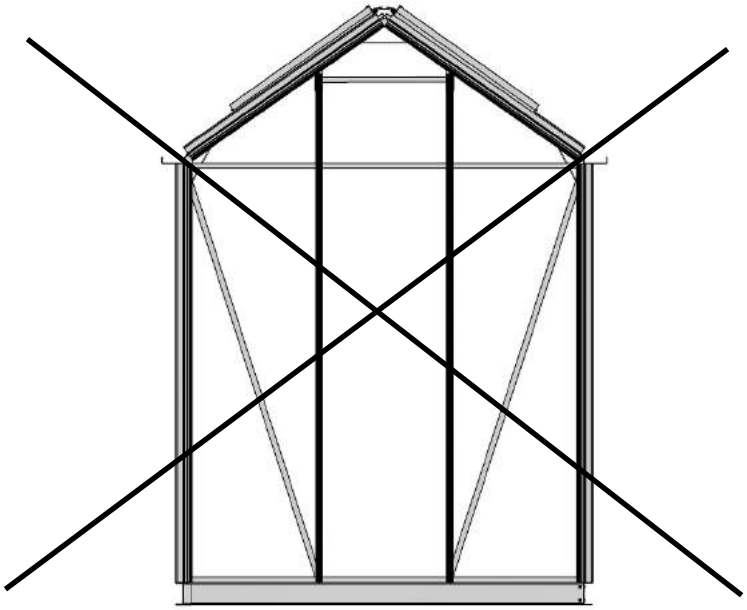

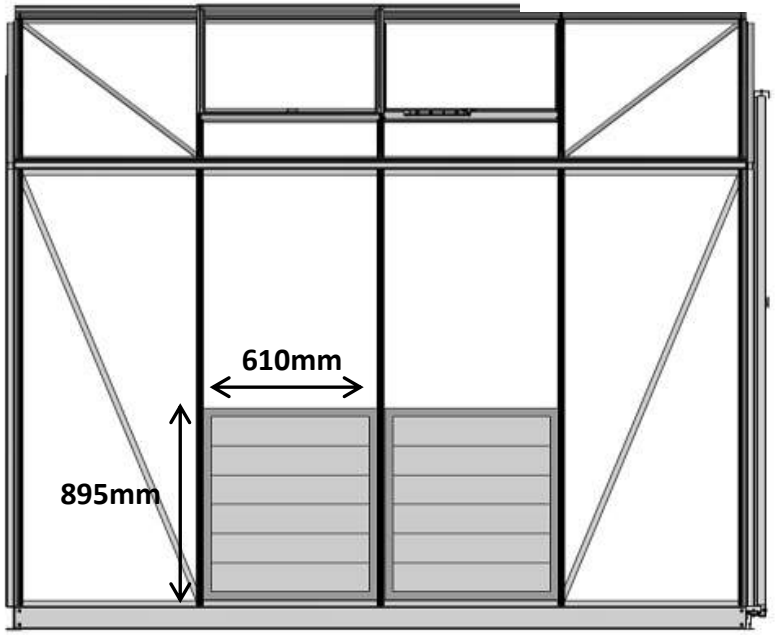

9

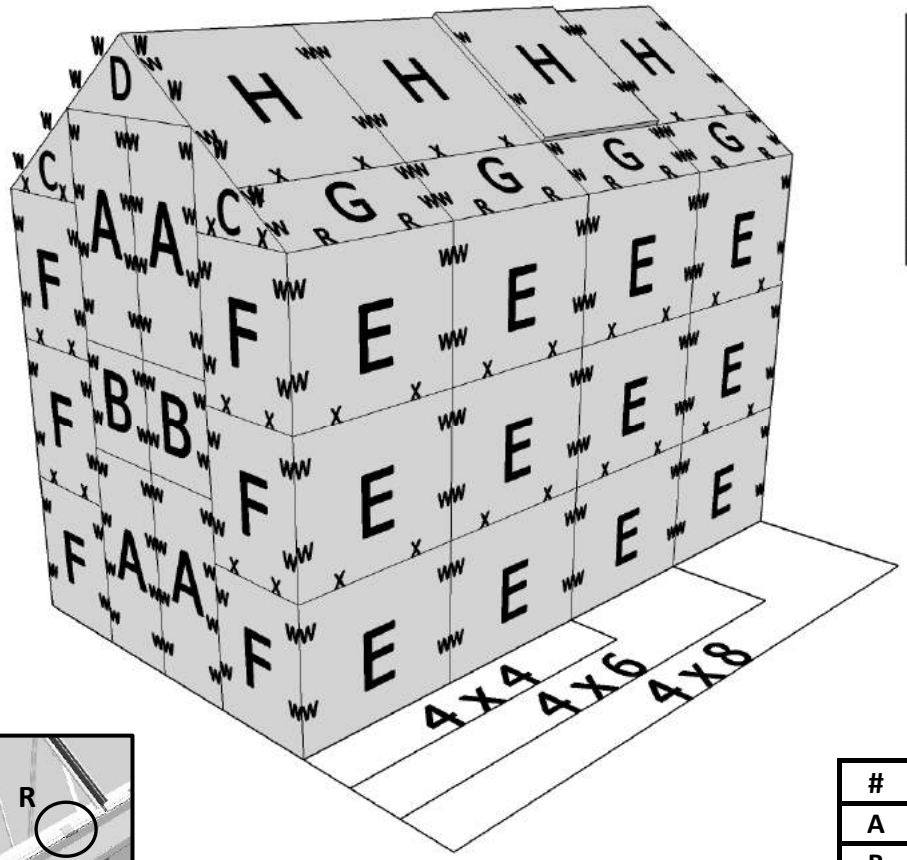

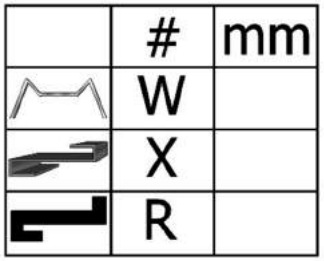

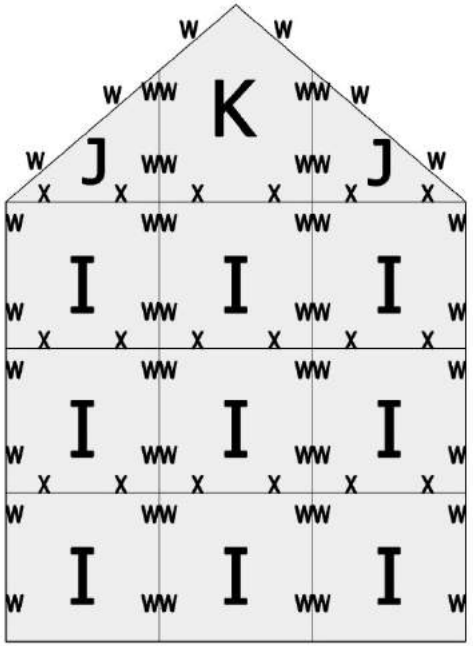

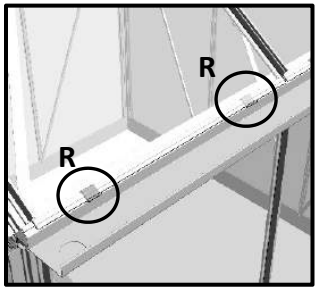

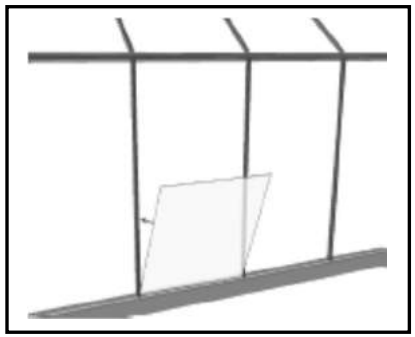

#	mm	4 x 4	4 x 6	4 x 8	No.
A	305 x 610	4	4	4	GLH 1034
B	305 x 212	2	2	2	GLH 1030
C	380 x 292 x 25	2	2	2	GLH 1036
D	610 x 13 x 226 x 13	1	1	1	GLH 1035
E	610 x 504	12	18	24	10221
F	380 x 504	6	6	6	GLH 1031
G	610 x 250	4	6	8	GLH 1031
H	610 x 610	4	6	8	10155
I	457 x 504	9	9	9	GLH 1032
J	457 x 334 x 25	2	2	2	GLH 1037
K	457 x 348 x 513 x 348	1	1	1	GLH 1038
W	-	200	200	200	N00300205
X	-	150	150	150	N00300210
R	-	8	12	16	RN00310458

3 mm. - Hærdet glas - Tempered glass - Sicherheitsglas - Verre - Cristales - Vetro - Lasit

9

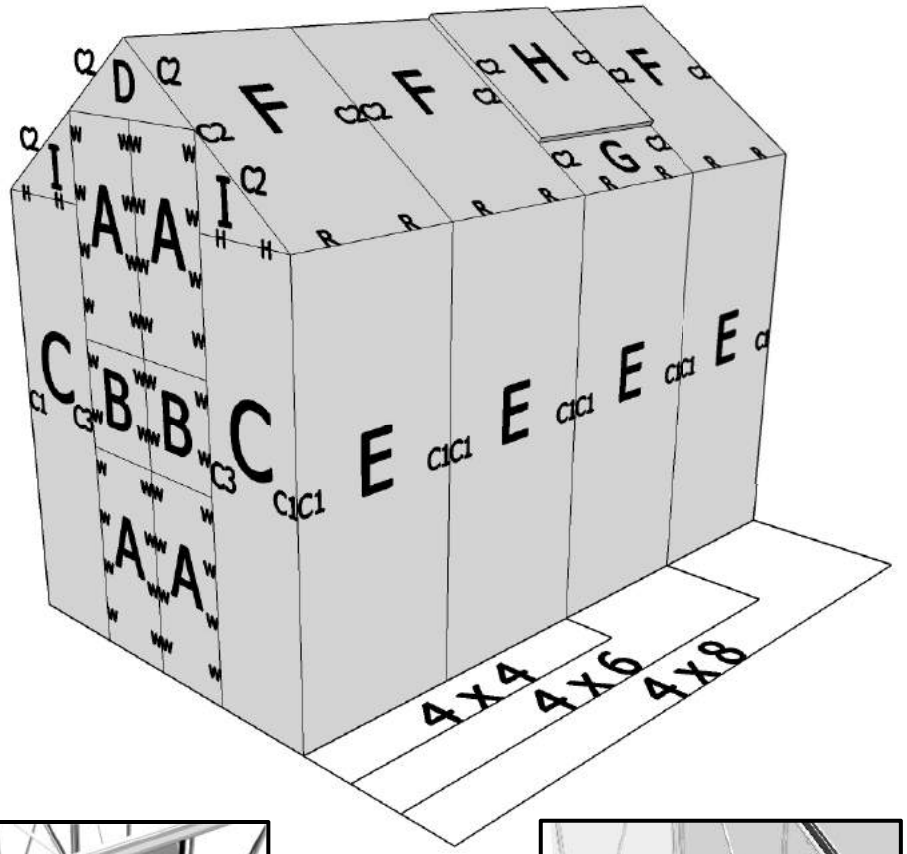

	#	mm
	W	
	R	
H	H	610
✓	C1	1490
✓	C2	830
✓	C3	1920

C2

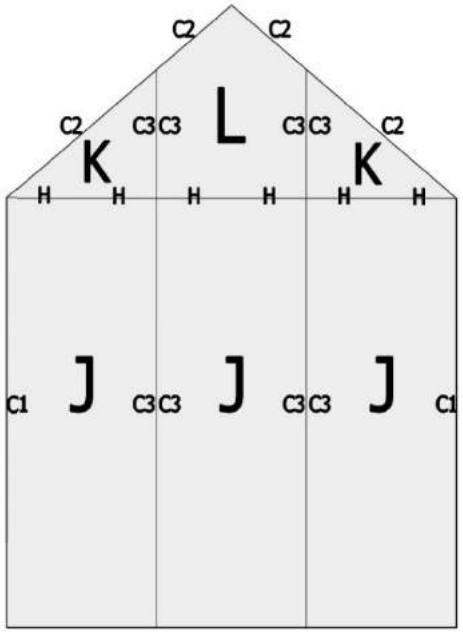

#	mm	4 x 4	4 x 6	4 x 8	No.
A	305 x 610	4	4	4	10997
B	305 x 212	2	2	2	GLT 3055
C	380 x 1486	2	2	2	GLT 3053
D	610 x 13 x 226 x 13	1	1	1	GLT 3057
E	610 x 1486	4	6	8	10225
F	610 x 862	3	4	6	GLT 3056
G	610 x 250	1	2	2	GLT 3006
H	610 x 610	1	2	2	10032
I	380 x 280 x 13	2	2	2	GLT 3058
J	457 x 1486	3	3	3	GLT 3054
K	457 x 322 x 12	2	2	2	GLT 3059
L	457 x 338 x 503 x 338	1	1	1	GLT 3060
C1	1490	12	16	20	RN00311417
C2	830	12	16	20	RN00311412
C3	1920	6	6	6	RN00311416
H	610	5	5	5	12467
W	-	200	200	200	N00300205
R	-	8	12	16	RN00310458

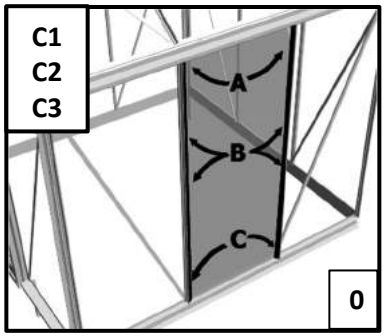

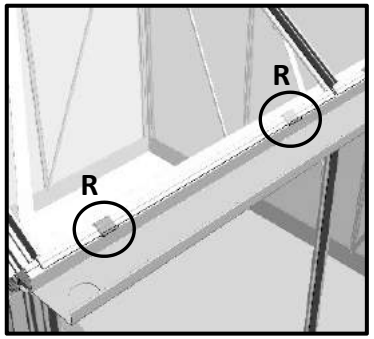

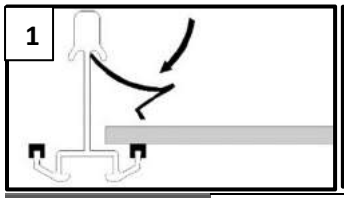

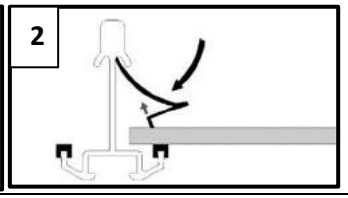

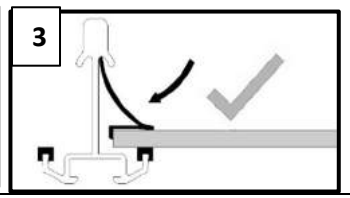

9

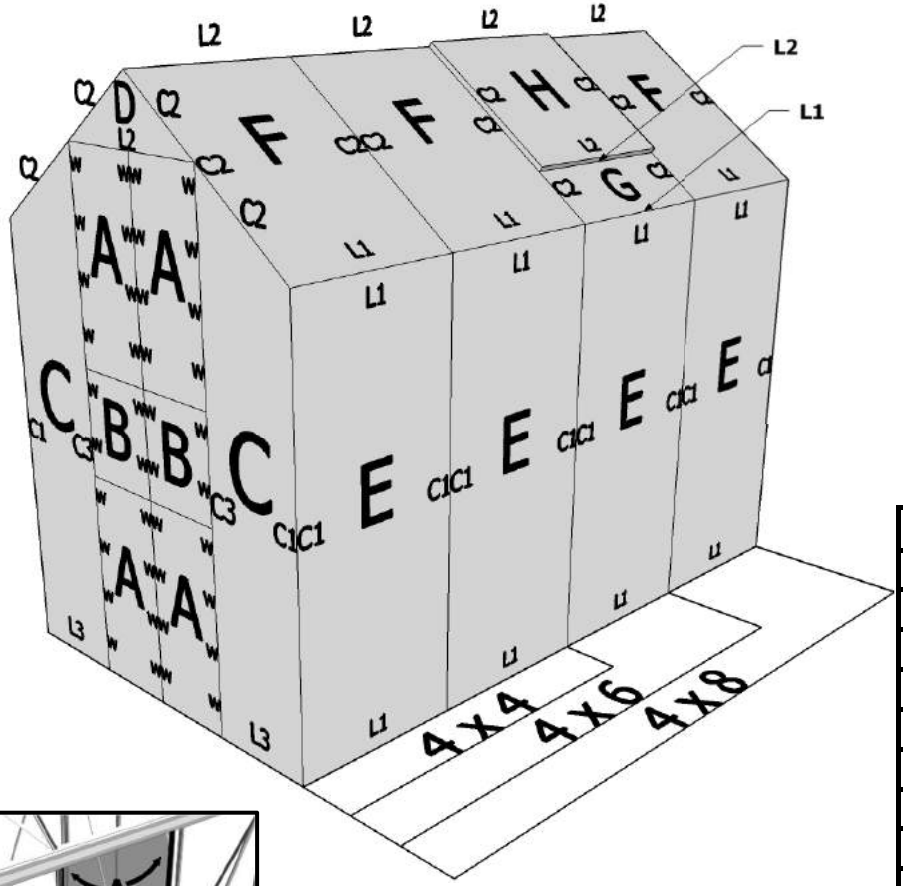

	#	mm
	W	
	C1	1490
	C2	830
	C3	1920
	L1	590
	L2	590

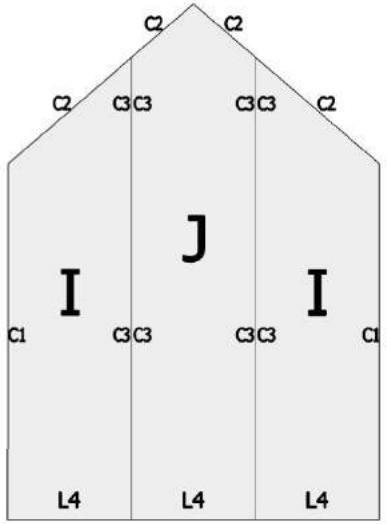

C2

#	mm	4 x 4	4 x 6	4 x 8	No.
A	305 x 610	4	4	4	RN00311314
B	305 x 210	2	2	2	RN00311315
C	380 x 1504 x 1760 LH	1	1	1	RN00311316
C	380 x 1760 x 1504 RH	1	1	1	RN00311317
D	610 x 13 x 226 x 13	1	1	1	RN00311318
E	610 x 1480	4	6	8	RN00311217
F	610 x 842	3	4	6	RN00311319
G	610 x 230	1	2	2	RN00311320
H	610 x 610	1	2	2	RN00311220
I	457 x 1504 x 1815 LH	1	1	1	RN00311321
I	457 x 1815 x 1504 RH	1	1	1	RN00311322
J	457 x 1823 x 1982 x 1823	1	1	1	RN00311323
C1	1490	12	16	20	RN00311417
C2	830	12	16	20	RN00311612
C3	1920	6	6	6	RN00311416
L1	590	12	18	24	RN00311503
L3	360	2	2	2	RN00311505
L4	437	3	3	3	RN00311504
L2	590	6	9	11	20240
W	-	200	200	200	N00300205

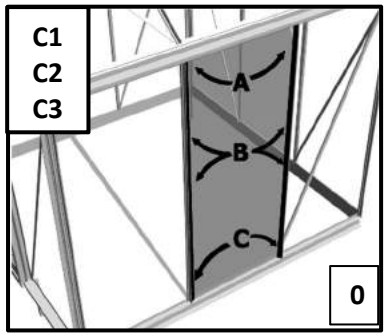

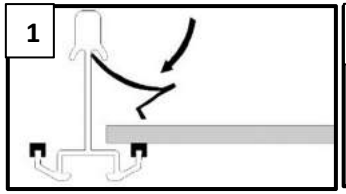

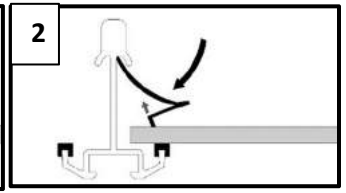

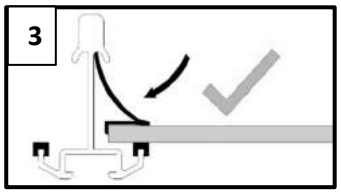

Finishing

10

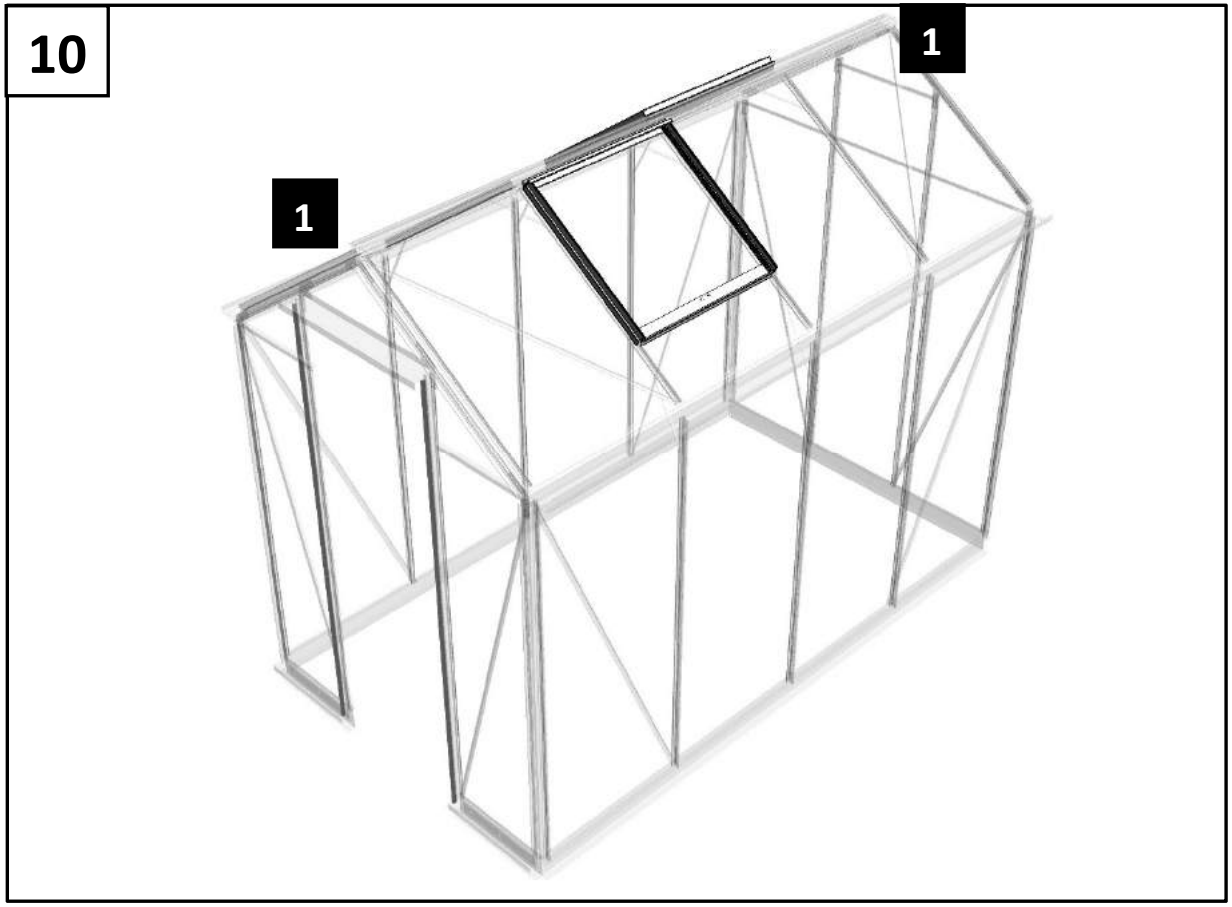

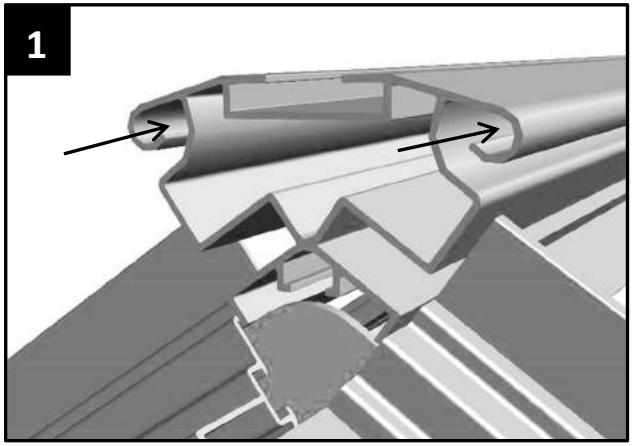

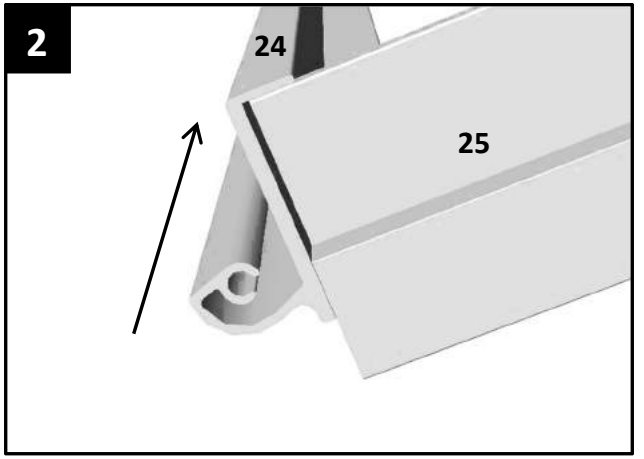

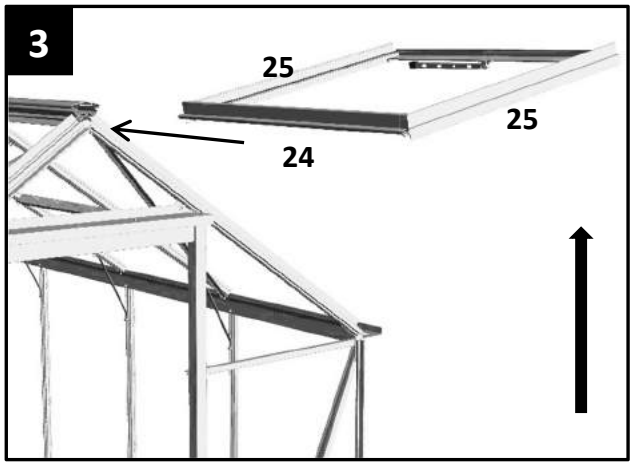

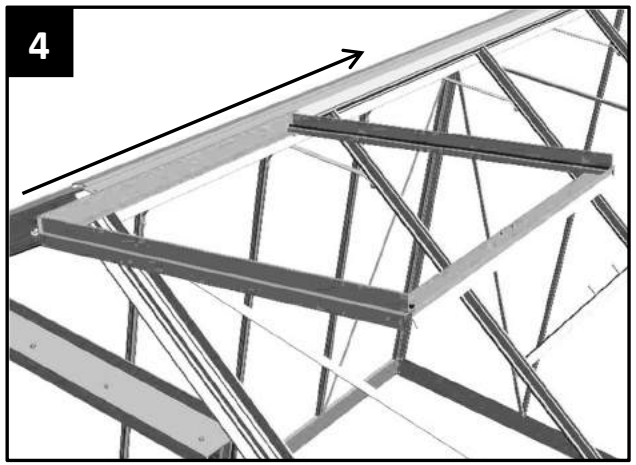

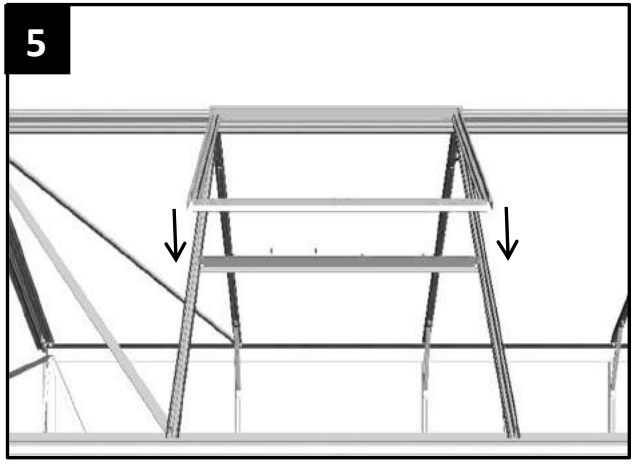

Finishing

10	#	mm	44/46/48	ITEM NO.
	53	-	2	RN00310453
	54	-	2	RN00310454
	74	-	2	RN00310450
	100	-	6	00402
	101	-	2	N00300422
	105	-	2	PT200
	113	1400	2	RN00310428
	115	-	2	RN00310462
	116	-	1	RN00310463
	117	-	1	RN00310464
	121	-	2	PT201

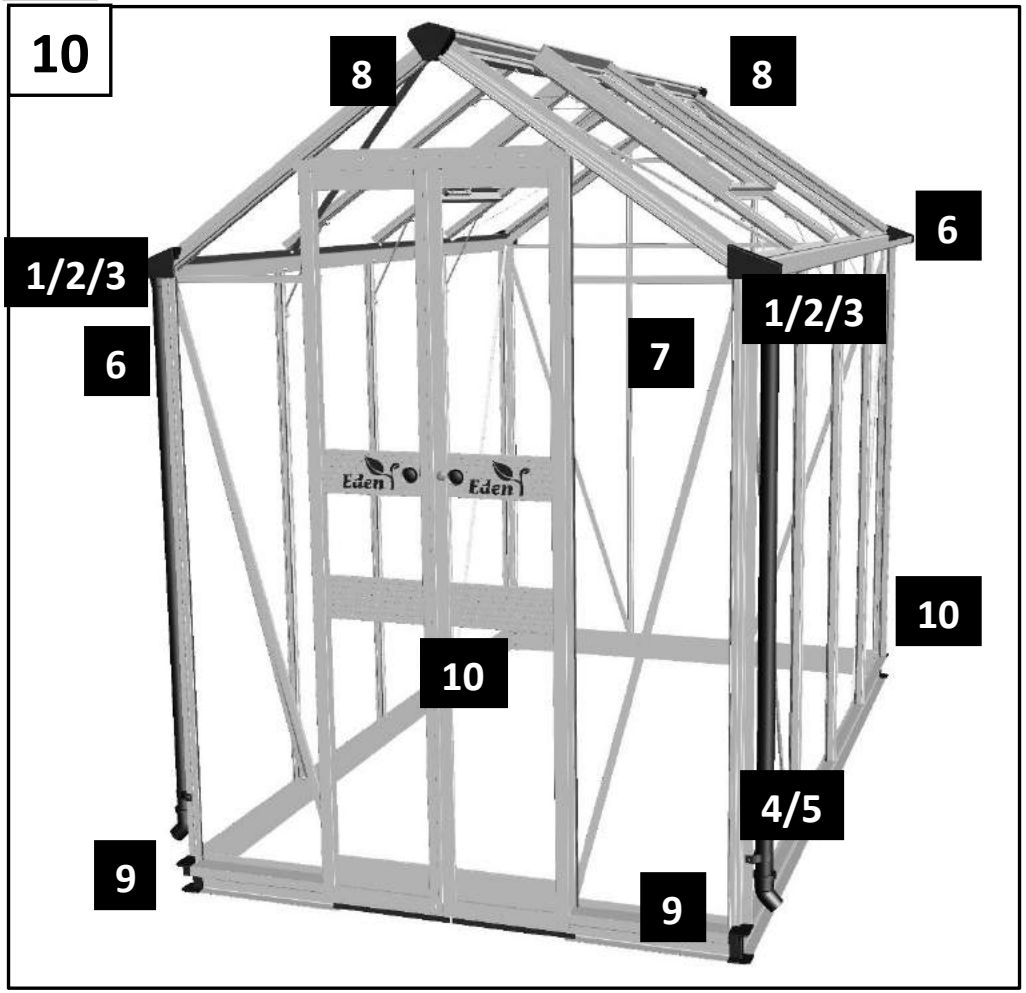

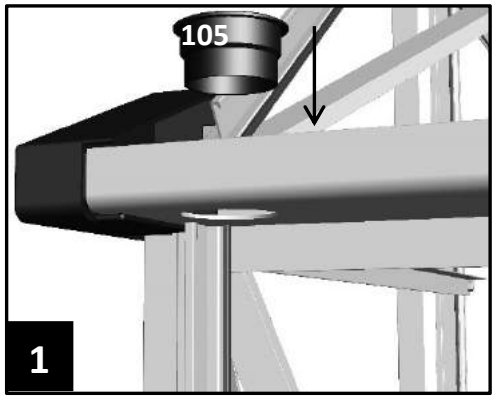

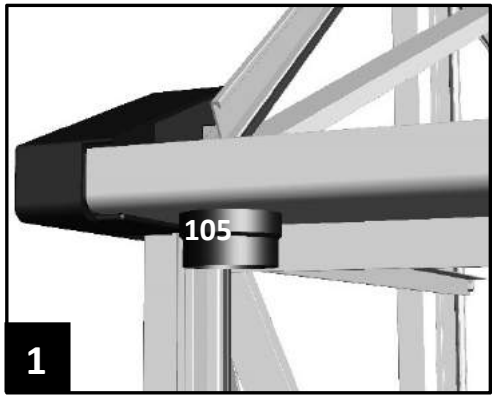

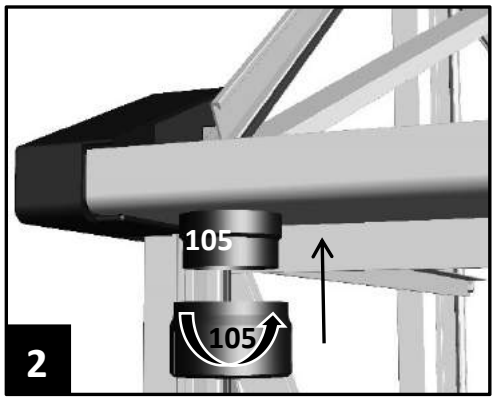

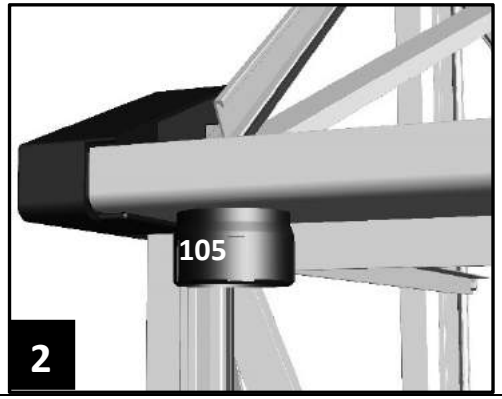

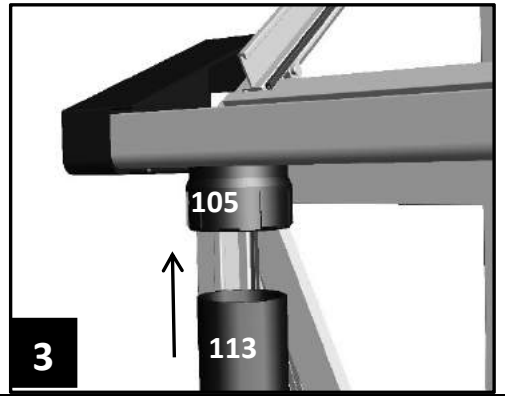

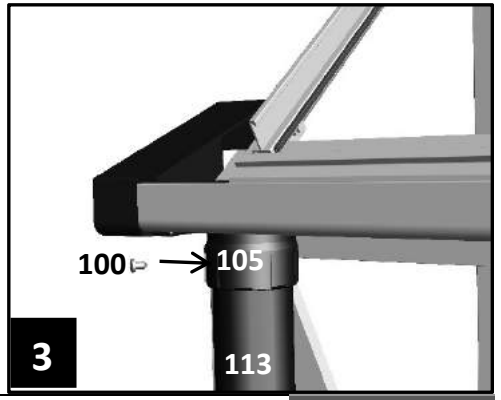

Finishing

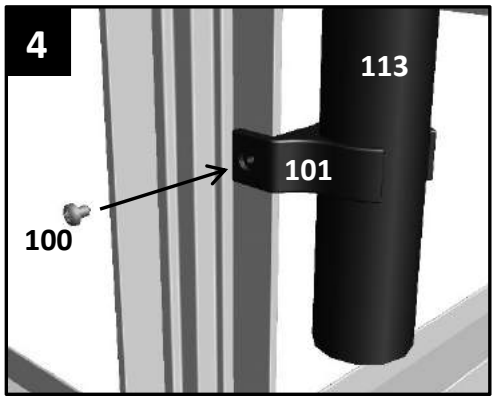
4
113
101
100

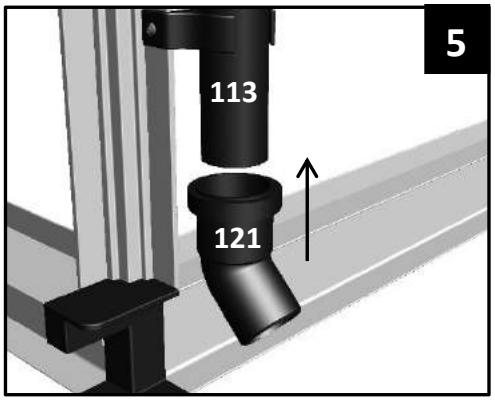
5
113
121

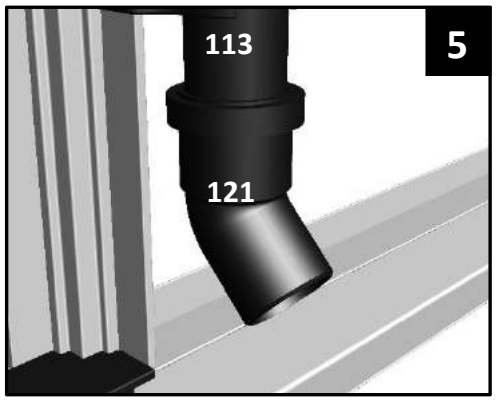
113
5
121

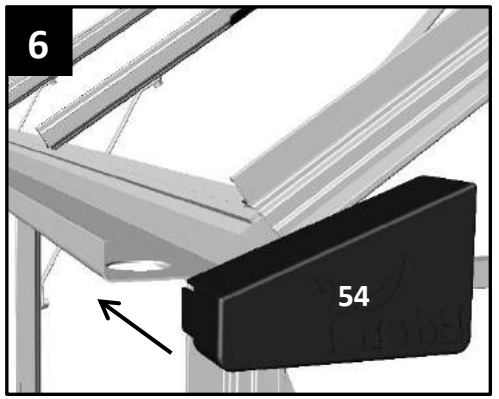
6
54

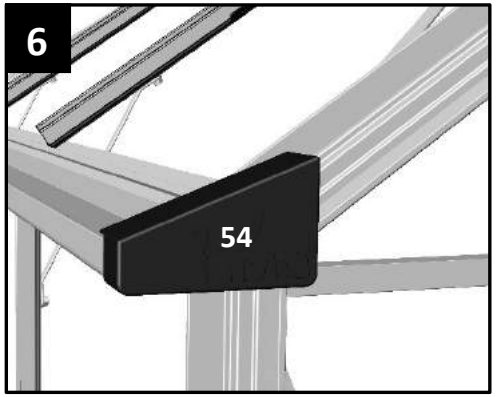
6
54

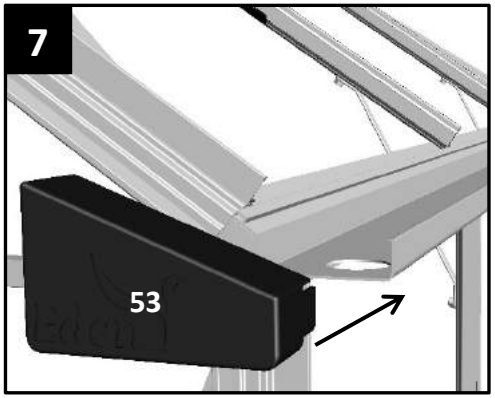
7
53

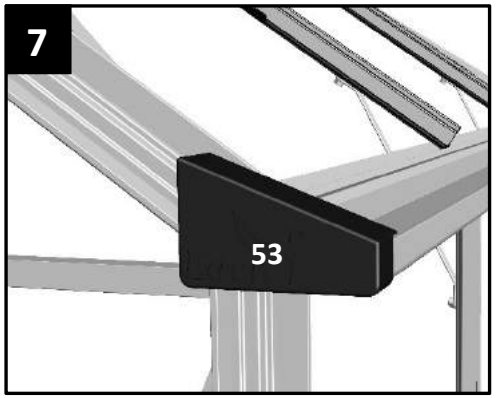
7
53

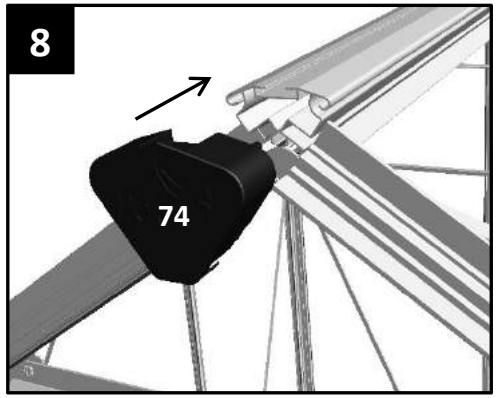
8
74

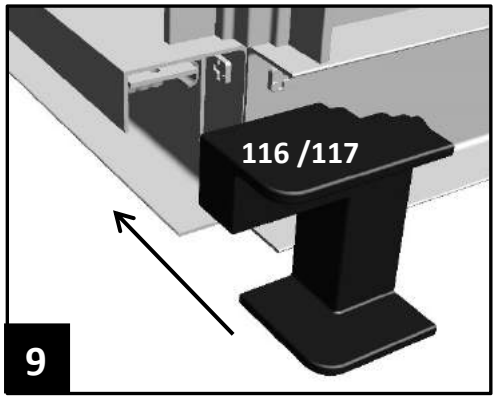
116 /117
9

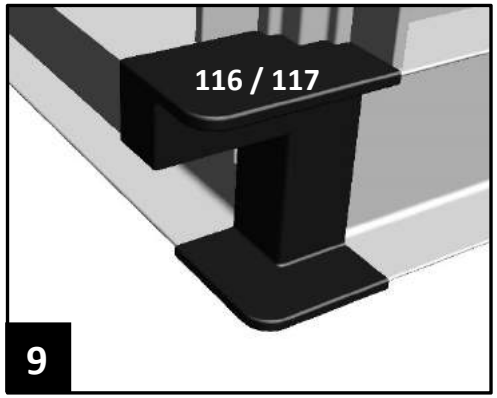
116 / 117
9

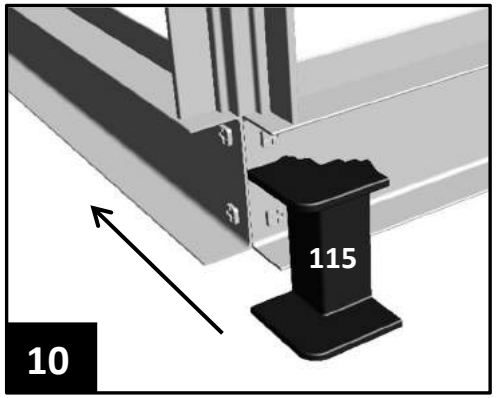
115
10

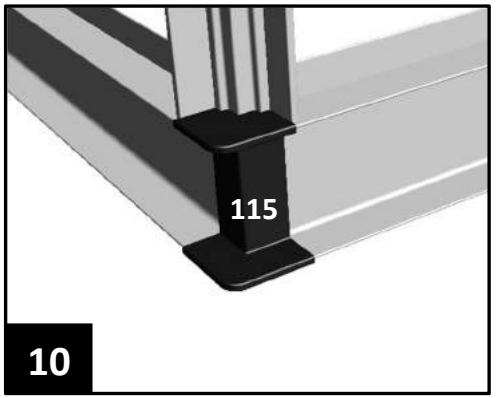
115
10

10.1

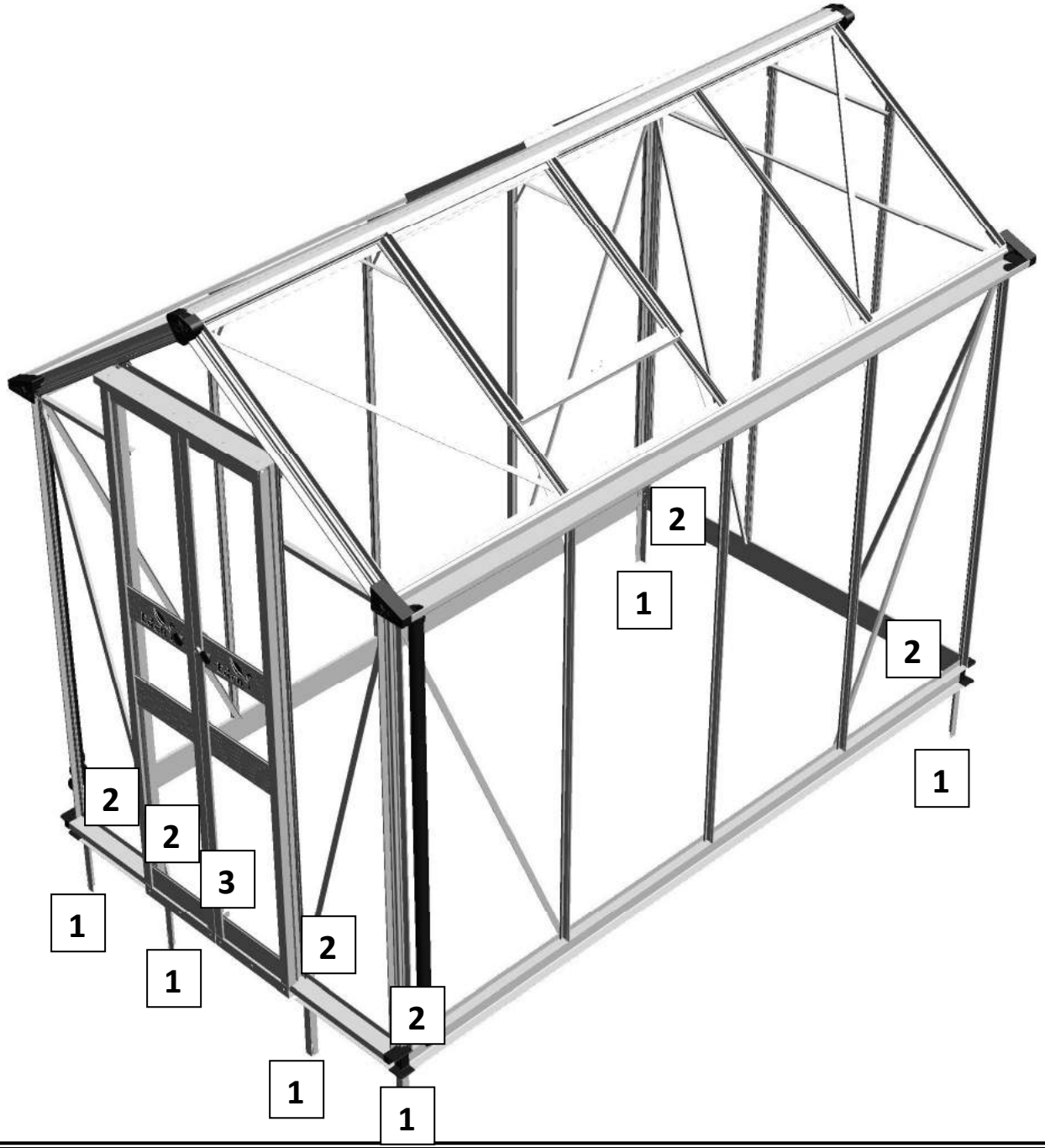

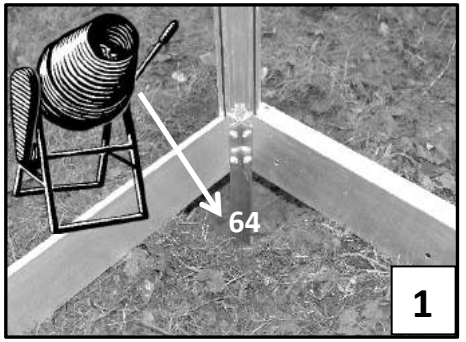

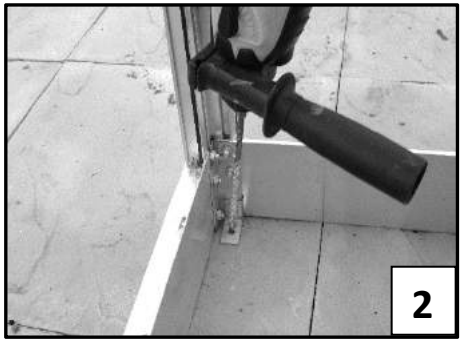

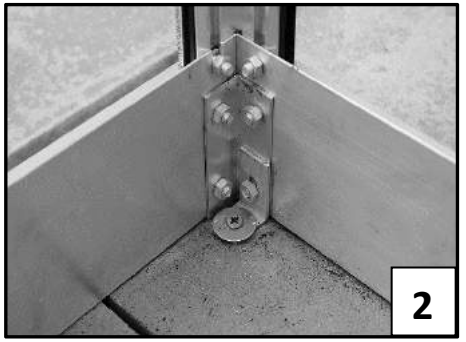

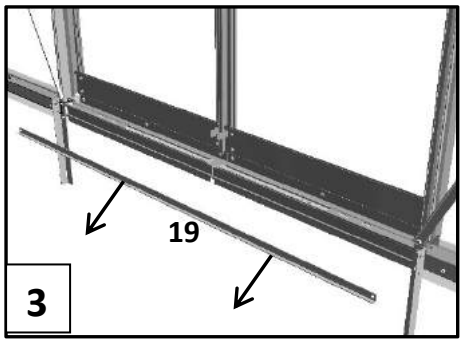

12 YEAR WARRANTY

Eden Halls Greenhouses Ltd. hereby agrees (subject to satisfaction of the Conditions referred to below) to make good free of charge by replacement or repair (at our election) any defects which we shall discover upon examination to be due to be faulty materials, components or workmanship which may appear in our greenhouse kits within 12 years of the date of despatch from our factory.

CONDITIONS OF WARRANTY CLAIM
(Each of which must be fulfilled before any warranty claim shall arise.)

1. That the claim is not attributable to any fault or damage arising from impact, modification, inappropriate use or treatment, incorrect handling or exposure to corrosive conditions, or the greenhouse being kept or installed other than under normal conditions, or to war, or act of God.
2. That the greenhouse must not have been repaired or serviced by any other than a qualified person employed by us.
3. That our instructions as to the assembly and the use of the greenhouse and its base have been strictly complied with.
4. That the claim is made by you as the original customer for your benefit.
5. That the detailed claim is notified to us in writing within 30 days of the date of discovery thereof.

GENERAL CONDITIONS OF WARRANTY

1. This warranty does not cover the cost of labour for the removal and replacement of any parts or parts replaced free of charge; such costs being the liability of the customer.
2. This warranty is only applicable to the greenhouse aluminium framework and ancillary parts forming the kit despatched and specifically excludes glass breakage.
3. This warranty is personal to you and is incapable of transfer and/or assignment.
4. This warranty does not extend beyond the cost of any faulty component referred to above.
5. This warranty applies in the United Kingdom only.

Eden Halls Greenhouses Ltd
The Distribution Centre
Stoke Orchard
Nr. Cheltenham, Glos.
GL52 7RS